NURSERY WORKERS

Prevent Back, Hand, Neck and Wrist Problems!

INSIDE:

- **Causes of Problems from Nursery Work**
- **Ways to Prevent Injuries**
- **Safe Work Ideas for Plant Propagators**

Container handle makes lifting 5-gallon plants safer (see page 5).

Bending low to reach containers can cause back problems. Pinching the edges of containers to grip them can cause hand problems.
The container handle: • Hooks onto container edges • Makes gripping easy • Reduces bending.

Using a weeding stand protects your back.

Bending over to weed flats can cause back problems. Using a work stand to hold flats allows you to stand up straight.

NOVEMBER 2001

California Department of Health Services • California Department of Industrial Relations

Is Your Job Causing You Problems with Your Back, Hands, Neck or Wrists?

- **Symptoms like numbness, weakness, tingling or pain** affect many nursery workers. These symptoms may be related to your job.

- **Symptoms may start gradually.** Many people try to ignore them at first. However, if you ignore them, symptoms can get worse and become harder to treat. Symptoms may occur at night, but still be work-related. Even if the symptoms go away on your days off, it doesn't necessarily mean the condition is gone. Tell your employer and get medical care right away if you have symptoms.

- **These symptoms may indicate serious injuries** that can interfere with your work and personal activities. They can even lead to permanent disability.

Why Do Nursery Workers Have These Problems?

- **Forceful, repeated motions** such as lifting heavy plant containers, grasping containers by pinching them at the edges, and squeezing shears – over and over, all day long. These work activities are hard on your back and hands. Each motion can cause small injuries to muscles and joints.

- **Bending over** for a long time to weed flats, and bending repeatedly to do other jobs, is hard on your back.

- **Lifting heavy plants while bending** can injure even strong back muscles, and can damage spinal discs.

- **Long work hours with few breaks** mean less time for muscle and joint injuries to heal.

- **Cold or wet work.** Cold hands have poor blood circulation, so forceful, repeated work motions can more easily injure them.

- **A stressful work environment,** caused by pressure to work fast, can lead to unsafe work procedures that cause injuries.

How Can Injuries Be Prevented?

By law, your employer is responsible for providing a safe and healthy workplace. Here are some things you and your employer can do to prevent injuries.

- **Talk with others at work.** Do workers have symptoms? Are some of the causes of injury present – heavy lifting, bending for long periods, cold? Does the employer know what preventive actions to take?
- **Use equipment that reduces the causes of injury,** like the handle and the weeding stand, whenever possible.
- **Rotate jobs.** For example, if one job requires a lot of bending, switch for a few hours to a job that involves standing or walking instead of bending.
- **Take regular breaks.** Even 15-second breaks can help prevent injury and fatigue.
- **Use power tools** for very repetitive jobs, such as making plant cuttings. Train workers before they use power tools.
- **Keep cutting tools sharp.** A sharp tool takes less force to use than a dull one, so it causes less strain to your hands. Also, if you use too much force, you may lose control of the tool.
- **Keep your hands warm and dry.** Dressing warmly in cold weather helps hands stay warm. Wear gloves, and change them if they get wet.
- **Make sure workers lift safely.** See "How to Lift Safely," on the following page.

How to Lift Safely.

1. Organize jobs beforehand.

- Remove obstacles from your path. Put mulch or gravel on muddy spots. Tripping or slipping while carrying can cause an injury.
- Try to set up loads so they are closer to waist height.
- When possible, use carts, wheelbarrows or stands to hold loads that will be lifted again.
- Get help with heavy loads. Work as a team. Offer to help others.

2. Perform the lift.

- Stand with feet apart (shoulder-width).
- Hold loads as close to the body as possible while lifting, carrying, and putting them down.
- Step around obstacles instead of reaching past them.
- Use your feet to turn your body while lifting and carrying. Twisting can hurt the spine.

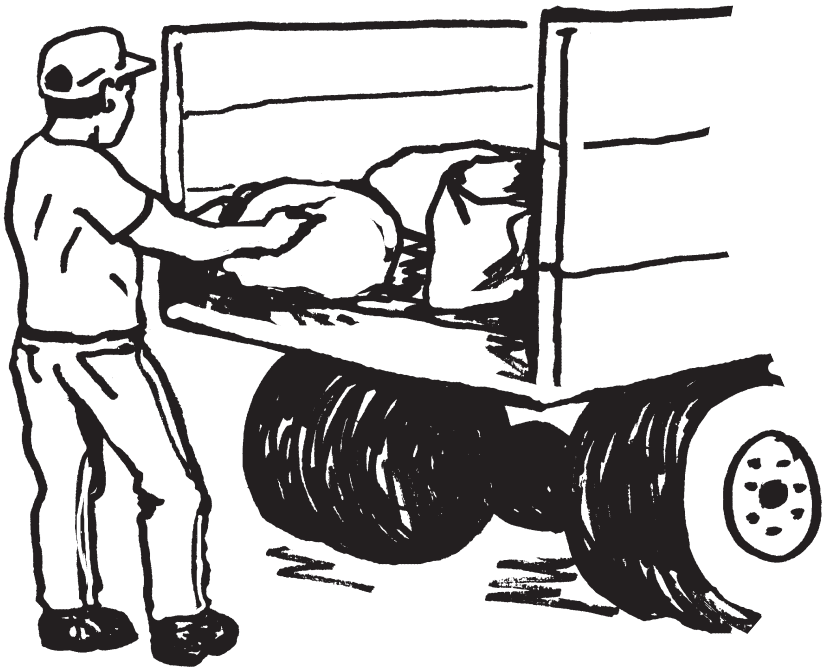

Lifting from a good height – between waist and shoulder – helps protect your back from injury.

More About the Handle for Plant Containers.

This handle is not available in stores. It can be made at a metal fabrication shop. Aluminum will be lighter in weight, but steel can be used if necessary. The cost is about $15 for materials, plus labor.

The handle holds 5-gallon cans that have external lip rims.

The handle works best for moving containers from one ground location to another, such as for spacing. In field tests of spacing, productivity stayed the same, or improved slightly.

To use the handle:

- Slide the notched hook under the container lip and lift.
- Let the container swing back and hang at an angle, so your wrist is relaxed.
- Carry in the angled position. Do not use your wrist to force the container to hang straight.
- When you are ready to put it down, swing the container gently forward into place.
- You can adjust the length of the handle according to the height of the containers and your comfort.

Lifting two plants at the same time, using one handle for each hand, is good for balance. However, carrying two heavy containers is a strain, whether or not the handles are used. Lifting a total weight more than 50 to 75 pounds may bring a significant risk of back injury.

How to make the handle:

1. Rubber grip; tapered from about 1-3/16" to 1-7/16" OD; to fit 1" OD tube; typically available in industrial supply catalogs.
2. 1" OD x 0.065" wall aluminum tube; cut at 21°; 4-3/4" on long side; welded at 69° angle to Part 3.
3. 1" x 1" x 1/8" x 16"-long aluminum angle; holes drilled on 1" centers and 0.5" from edge measured on 1"-wide side.
4. 1.5" x 1.5" x 0.094" x 3/8"-long steel sq. tube; welded along top joint.
5. 1" x 1" x 0.065" x 5"-long steel sq. tube; 1/4" hole drilled 2-1/2" from end and 3/8" from edge; welded to Part 9 with 2" overlap.
6. 1.5" x 1.5" x 0.094" x 3/8"-long steel sq. tube; remains loose on tube.
7. 1/4" D x 1"-long steel round; inserted into Part 5 and welded flush on the non-visible side in drawing.
8. 1-1/2" x 1/8" steel flat bar cut at about 45° with approximate top and bottom lengths of 1" and 2-1/2", respectively; notched generally as shown in drawing (notches are for container lips that have reinforcement ribs that may interfere with the coupling of the "point" and the container); ends bent slightly forward after welding; welded to Part 9 with 1/2" overlap.
9. 1" x 1" x 0.065" steel sq. tube; cut at 45°; 4-1/2" on long side.
10. 1" x 1/8" x 9-1/2" long steel flat bar; 1/2" end-bends pointing forward; approx. 7-1/4" overall width after rolling; welded at bottom of Part 9.

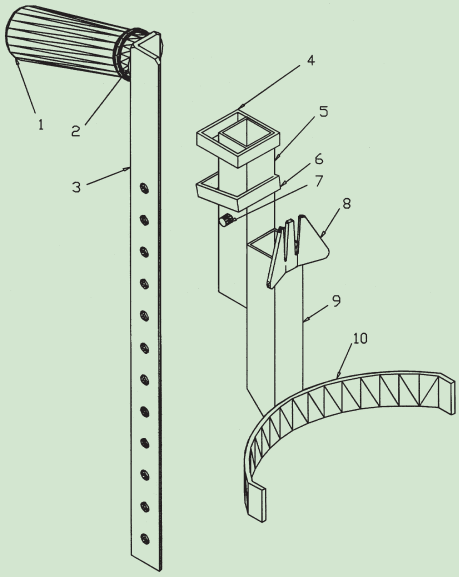

More About Work Tables for Weeding Flats.

Choose a table height that allows a person's hands to work at waist height. For many women nursery workers, 32" is a good table height for standing work on 4" flats.

You may be able to buy a lightweight metal work table at a home improvement store. If not, you can have one made at a metal fabrication shop. Costs for materials is about $25. Light-duty steel is recommended. The tabletop could be expanded metal welded to the frame, or a metal plate welded or bolted on. The frame can be made of angle iron (3/4" x 3/4" x 1/8") for the legs and bracing. For wheels, shorten two of the legs and fit them with a steel rod, two lawnmower wheels, and push-on retaining caps.

How to Prevent Hand Problems While Making Cuttings (Propagation).

If you use regular shears:

- Shears should have a spring that opens the tool between cuts.
- Handles should be at least 4 or 5 inches long. They should have smooth plastic or rubber coating, without finger grooves.
- Keep the cutter blade sharp. Less force will be required to cut.
- Rest your hands for a few seconds every few minutes. Even very short breaks can help prevent injury.

Consider getting power shears:

- Get a bench-mounted power cutter for cutting hard, woody plants. This can make the work easier, safer and faster. The cost is $1000 - $1250. One place to buy power cutters is MG Enterprises, Rocky Canyon Road, Creston CA 93432. *(This information is for your convenience; it is not an endorsement of the company or product.)*

Taking Action to Prevent Injuries

- **Form a safety committee.** It can be a big help in keeping your workplace safe. Get key people from both labor and management to participate. A successful committee is one that has strong employer support. An experienced ergonomic consultant can provide technical assistance. Here's what a safety committee can do:
  - Talk to workers and inspect jobs to find conditions that can cause injuries.
  - Encourage workers to report work-related injuries and symptoms to their supervisor.
  - Identify the jobs that have caused injuries.
  - Figure out how particular jobs may be causing injuries.
  - Develop practical solutions and recommend that management try them out on a few individuals.
  - Check to see if the changes are effective before recommending them for all affected jobs.
  - Monitor employees using new equipment and/or making other job changes.

What Does the Law Say?

- **Short-handled tools are prohibited** in California agriculture for weeding, thinning, or hot-capping in a stooped, kneeling or squatting position (General Industry Safety Order 3456).

- **Your employer may have to follow a California rule about repetitive work. Find out:**
  - Were two or more workers injured within the last 12 months? The injured workers must have done the same type of work.
  - Did a doctor report that each injury is mainly caused by the job? Each worker can have a different diagnosis, as long as it's related to the same kind of repetitive work.

  If the answer to both questions is "Yes," the employer must change the work or equipment to prevent injuries. Worker training is also required.

  This rule is called Repetitive Motion Injuries (General Industry Safety Order 5110). It is enforced by Cal/OSHA.

What is Cal/OSHA? It is California's Division of Occupational Safety and Health. This government agency investigates workers' complaints and answers questions about workplace safety rules. Complaints are confidential. Find the phone number in the blue Government Pages near the front of the phone book. Look under: State of California, Industrial Relations, Division of Occupational Safety and Health, Compliance or Enforcement.

For employers, California has the Consultation Service **(1-800-963-9424)**. This agency explains workplace health and safety regulations, and helps employers comply with them. They do not cite or impose fines.

For More Information...

- **HESIS (Hazard Evaluation System and Information Service).** **www.dhs.ca.gov/ohb** Answers questions about workplace hazards and has many free publications available.

  For information on workplace hazards: (510) 622-4317. Please leave a message and your call will be returned.

  For HESIS Publications: (510) 622-4328

  - *Guide to Getting Medical Care for Job-Related Pain That Won't Go Away.* Helps workers recognize symptoms that need treatment; choose a doctor; and work with health care providers, employers, and the workers' compensation system.
  - *A Physician's Guide to the California Ergonomics Standard.* Helps health care providers identify, document and treat work-related repetitive motion injuries and other musculoskeletal disorders.
  - *HESIS Publication List.* Pamphlets and fact sheets on workplace hazards including chemicals, repetitive motion, and infectious diseases. Visit our website, call or write for the list.

- **Cal/OSHA Consultation Service.** **www.dir.ca.gov/DOSH** Helps employers to improve safety and health conditions without triggering enforcement inspections. Call **1-800-963-9424** for assistance, or to ask for free booklets:

  - *Easy Ergonomics: A Practical Approach for Improving the Workplace*
  - *Farm Labor Contractor Safety and Health Guide* (English and Spanish)

- **Workers' Compensation.** If you are injured on the job, or work makes an existing injury worse, you may have a right to receive benefits such as medical care, wage replacement and retraining (if a job change is needed). Benefits are available to all workers, including immigrants, part-time and temporary workers. Call **1-800-736-7401** for more information and for free publications in English and Spanish:

  - Factsheet #1: *What Every Worker Should Know*
  - Factsheet #2: *After You Get Hurt on the Job*

- **Other resources for safety and health in agriculture.**

  - *Simple Solutions: Ergonomics for Farm Workers*, NIOSH Publication #2001-111. **1-800-356-4674** No charge for single copy.
  - **Agricultural Ergonomics Research Center, University of California, Davis.** **http://ag-ergo.ucdavis.edu** Develops practical ergonomic solutions for agriculture.

ABOUT THIS FACT SHEET. This publication was produced by HESIS, the Hazard Evaluation System and Information Service, Department of Health Services and Department of Industrial Relations, State of California. We gratefully acknowledge technical assistance from the University of California Agricultural Ergonomics Research Center, the University of California Ergonomics Program, and NIOSH (National Institute of Occupational Safety and Health).

The recommendations in this fact sheet were developed by HESIS based on our evaluation of research studies and published information, and general ergonomic principles. They may not be appropriate for every job or individual worker.

This publication may be copied in its entirety for educational use.

HESIS
HAZARD EVALUATION SYSTEM & INFORMATION SERVICE
California Department of Health Services
Occupational Health Branch
1515 Clay Street, Suite 1901, Oakland, CA 94612
510-622-4300 • www.dhs.ca.gov/ohb

Gray Davis, Governor
State of California

Grantland Johnson, Secretary
Health and Human Services Agency

Diana M. Bontá, R.N., Dr.P.H.
Director, Department of Health Services

Steve Smith, Director
Department of Industrial Relations

JANE NORLING DESIGN

OSP 01 63161