TITLE 24 PROPOSED PUBLIC POOL REGULATIONS

The California Department of Public Health (CDPH) is working with the California Conference of Directors of Environmental Health to revise the existing public pool regulations. These new regulations will require the public pools in California to meet current health and safety practices, standards, and operational requirements. Inquires about these draft regulations should be directed to the Environmental Health Services Section, P.O. Box 997377, MS 7404, Sacramento, CA 95899-7377, Attention Robin Belle Hook.

DRAFT

CALIFORNIA CODE OF REGULATIONS

TITLE 24

CHAPTER 31B ~~[DPH]~~

PUBLIC ~~SWIMMING~~ POOLS

Division I - GENERAL

1) Amend Section 3101B as follows:

SECTION 3101B

SCOPE

The provisions of this chapter shall apply to the construction, installation, renovation, alteration, addition, relocation, replacement, or use of any public ~~swimming~~ pool~~,~~ and to its ~~appurtenant~~ ~~auxiliary~~ ancillary ~~areas and~~ facilities, ~~and to its~~ mechanical equipment and related piping. Public pools include those located in or designated as the following: commercial building, hotel, motel, resort, ~~automobile and trailer park, automobile court,~~ recreational vehicle or mobile home park, campground, apartment house, condominium, townhouse, homeowner association, club, community building or area, public or private school, ~~gymnasium, and~~ health club or establishment, water park, swim school, medical facility, bed and breakfast, licensed day care facility, recreation and park district and municipal pools.

NOTE: Authority cited: Section 131200 Health and Safety Code. Reference: Sections 116043 and 116050, Health and Safety Code.

DRAFT

2) Amend Section 3102B as follows:

SECTION 3102B

DEFINITIONS

~~For the purposes of this Chapter, the following terms shall have the meanings indicated:~~

Abbreviations:

"ANSI" is American National Standards Institute

"APHA" is American Public Health Association

"ASME" is American Society of Mechanical Engineers

"ASTM" is American Society for Testing Materials

"CPR" is cardiopulmonary resuscitation

" ° " is degrees

"F" is Fahrenheit

"fps" is feet per second

~~**"F"** is Fahrenheit~~

"FT" is feet

"gpm" is gallons per minute

"IN" is inches

"kg" is kilogram

"kN/m^2" is kilonewton per square meter

"L" is liter

"L/m per m²" is liters per minute per meter squared

"m" is meter

DRAFT

"m/s" is meters per second.

"mJ/cm2" is millijoule per square centimeter

"mm" is millimeters

"NRTL" is Nationally Recognized Testing Laboratory

"NSF" is NSF International

"ppm" is parts per million

"SVRS" safety vacuum release system

"USA" is United States of America

Definitions:

AIR GAP, DRAINAGE is the unobstructed vertical distance through the free atmosphere between the lowest opening from any pipe, plumbing fixture, appliance or appurtenance conveying waste to the flood-level rim of the receptor.

AIR GAP, WATER DISTRIBUTION is the unobstructed vertical distance through the free atmosphere between the lowest opening from any pipe or faucet conveying potable water ~~or waste to a tank, plumbing fixture receptor or other device and~~ to the flood level rim of ~~the~~ any tank, vat or fixture ~~receptacle~~.

ACCESSIBLE is having access to a fixture, connection, appliance or equipment but may require the removal of an access panel, door or similar obstruction.

~~**AUXILIARY AREA**~~ **ANCILLARY FACILITY** ~~is a public dressing, locker, shower or toilet area or building space intended to be used by bathers~~ is any area used in conjunction with or for the operation of a pool such as public dressing rooms, lockers, shower or bathroom areas, drinking fountains, equipment room, pool deck area, pool enclosure or building space that is intended to be used by pool users.

ARCHITECT is a California licensed architect pursuant to California Business and Professions Code, Division 3, Chapter 3.

BACKWASH is the process of reversing the flow of water through the filter to thoroughly ~~cleansing~~ clean the filter media and/or elements and remove the debris from the contents of the filter vessel.

~~**BATHER** is a person using a pool and adjoining deck areas for the purpose of water sports such as diving, swimming, wading, or related activities.~~

CANTILEVERED DECKING is the part of the deck which extends over a top edge of a pool or spa.

CLEAN POOL WATER is ~~a~~ pool water that is free of dirt, oils, scum, algae, floating materials or ~~other~~ visible organic and inorganic materials that would ~~sully~~ pollute the water.

CLEAR POOL WATER is pool water that is free from cloudiness and is transparent.

COPING is a slip-resistant cap installed on the top edge of a pool or spa.

CORROSION RESISTANT is the ability of a material to maintain its ~~capable of maintaining~~ original surface characteristics under prolonged ~~the~~ use in its environment.

CROSS-CONNECTION is any connection or arrangement, physical or otherwise, between a potable water supply system and any plumbing fixture or any tank, receptor, equipment or device through which it may be possible for nonpotable, used, unclean, polluted and contaminated water or other substances to enter into any part of such potable water system under any condition.

DECK is an area surrounding a pool which is specifically constructed or installed for use by ~~bathers~~ pool users.

DRAFT

DIATOMACEOUS EARTH is a filtering media consisting of microscopic fossilized skeletons of diatoms.

~~**DRAIN** is a fitting or fixture, usually at or near the bottom of a pool, through which water leaves the pool normally to the recirculation pump.~~

EASILY CLEANABLE is a characteristic of a surface or material that allows removal of dirt, stains or residue by normal cleaning methods.

EFFECTIVE PARTICLE SIZE is the theoretical size of sieve in mm that will pass 10 percent by weight of sand.

ENFORCING ~~**AGENCY**~~ **AGENT** is the health officer, ~~or~~ director of environmental health, ~~or their designated~~ registered ~~sanitarian~~ environmental health specialist or environmental health specialist trainee ~~representative~~.

ENGINEER is ~~either~~ a California licensed civil engineer or mechanical engineer pursuant to California Business and Professions Code, Division 3, Chapter 7.

EQUIPMENT AREA is an area ~~used for~~ where the recirculation system and all related ~~piping~~ appurtenances are located.

HANDHOLD is a structure located at or above the water line around the perimeter of the pool wall that provides a physical means for a pool user to grasp the pool side.

HOSE BIBB is a valve with a fitting for a hose.

HOT WATER is water at a temperature exceeding or equal to 120°F (49°C).

INLET is a fitting or fixture through which ~~circulation~~ recirculated water enters the pool.

LADDER is a series of vertically separate treads or rungs either connected by vertical rail members or independently fastened to an adjacent vertical pool wall.

DRAFT

LIVING UNIT is any building or portion thereof that contains living facilities including provisions for sleeping.

MAIN DRAIN is a submerged suction outlet typically located at the bottom of a pool that conducts water to a recirculating pump.

MEDICAL POOL is a special-purpose pool used by a S~~s~~tate-recognized medical institution engaged in the healing arts under the direct supervision of licensed medical personnel for treatment of the infirm.

OUTLET is a fitting or fixture through which recirculated water is removed from the pool which may or may not be connected to the pump.

~~**OVERFLOW SYSTEM** is the system which includes perimeter-type overflow gutters, surface skimmers, surge or collector tanks, other surface water collective system components and their interconnecting piping.~~

PERFORMANCE STANDARD is a standard that is accredited and published. Products compliant with a standard may be listed by any authorized NRTL.

PERIMETER OVERFLOW SYSTEM is a system which includes perimeter-type overflow gutters, surge basin or similar surface water collective system components and their interconnecting piping.

PERMISSIBLE EXPOSURE LIMIT is the maximum amount or concentration of a chemical that a worker may be exposed to under United States Occupational Safety and Health Administration regulations.

POOL OR PUBLIC POOL is ~~a~~ an ~~constructed or prefabricated~~ artificial basin, chamber or tank constructed or prefabricated with impermeable surfaces that is used, or intended to be used, ~~primarily by bathers, and not for cleaning of the body or for individual~~

DRAFT

~~therapeutic use~~ for public swimming, diving or recreational activities but does not include individual therapeutic tubs or baths where the main purpose is the cleaning of the body. Any manmade lake or swimming lagoon with a sand beach or sand bottom is not a public pool.

POOL AREA is the area within the pool enclosure as required in Section 3119B.

POOL OPERATOR or OPERATOR is a person who is responsible for maintaining compliance with all requirements relating to pool operation, maintenance and safety of pool users

POOL USER or USER as it pertains to this Chapter 31B is a person using a pool and ancillary facilities for the purpose of water activities such as diving, swimming, ~~or~~ wading or instructing. This does not define the quantity of occupants as it pertains to the Building Code, Title 24, Chapter 10.

POOL USER CAPACITY is the maximum number of persons allowed in a pool at any one time based on the pool surface area.

~~**POOL VOLUME** -is the amount of water expressed in gallons (liters), that a pool holds when filled.~~

~~**PRIVATE POOL** is any constructed pool, permanent or portable, which is intended for noncommercial use as a swimming pool by not more than three owner families and their guests.~~

~~Note: A single family residence is a Group R, Division 3 occupancy.~~

~~**PUBLIC POOL** is a pool other than a private pool~~.

RADIUS OF CURVATURE is the radius arc which denotes the curved surface from the point of departure from the springline of the pool to the pool bottom.

DRAFT

READILY ACCESSIBLE is capable of being reached easily for cleaning, repair, replacement or inspection without the necessity of removing a panel, door or similar obstruction and without requiring a person to climb over or remove obstacles or to use devices such as portable ladders.

READILY DISASSEMBLED means capable of being taken apart by hand or by using only simple tools such as a screwdriver, pliers or open-end wrench.

~~**RECESSED STEPS** is a riser/tread or series of risers/treads extending down into the deck with the bottom riser or tread terminating at the pool wall (thus creating a "stair well").~~

RECESSED ~~TREADS~~ STEPS are a series of vertically spaced cavities in the pool wall creating riser and tread areas for pool ingress and egress.

RECIRCULATION SYSTEM is the ~~interconnected system traversed by the recirculated water from the pool until it is returned to the pool, i.e., from the pool through the collector or surge tank, recirculation pump, filters, chemical treatment and heater (if provided), and returned to the pool.~~ system of hydraulic components designed to remove, filter, disinfect and return water to the pool.

RIM FLOW GUTTER is a perimeter overflow system in which the overflow rim is at the same elevation with the deck.

~~**SHALLOW POOL** is a pool that has a maximum water depth of less than 6 feet (1829 mm).~~

SKIMMER EQUALIZER LINE is a submerged suction outlet located below the waterline and connected to the body of a skimmer that prevents air from being drawn into the

DRAFT

pump if the water level drops below the skimmer weir or the skimmer is blocked by debris. A skimmer equalizer line is not a main drain.

SLIP RESISTANT is a rough finish that is not abrasive to the bare foot.

SPA POOL OR SPA is a pool that incorporates a water jet system, an aeration system or a combination of the two systems used in conjunction with heated water.

SPECIAL PURPOSE POOL is a pool constructed exclusively for a specific purpose, such as instruction, diving, competition or medical treatment.

SPLASH ZONE is the maximum distance the water from a spray ground can project horizontally.

SPRAY GROUND is a pool with no standing water in the splash zone and consists of a surge basin with a recirculation system from which water is directed through water features for contact with pool users.

SPRINGLINE is the point from which the pool wall breaks from vertical and begins its arc in the radius of curvature.

STAIRS are a series of two or more steps.

STEP is a riser and tread.

STEP RISER OR RISER is the vertical portion of a step.

STEP TREAD OR TREAD is the horizontal portion of the step.

~~**STEPS, RECESSED STEPS, LADDERS AND RECESSED TREADS** are those means of entry and exit to and from the pool which may be used in conjunction with each other.~~

SUCTION OUTLET is any outlet that is connected to the pump through which water is removed from the pool.

DRAFT

SURGE BASIN is a reservoir or surge trench open to the atmosphere that receives water via gravity flow from the main drain, spray ground or perimeter overflow system and from which the recirculation system operates.

TEMPERED WATER is water between 100°F and 110°F.

~~**TREATMENT OF WATER** is the process of conditioning and disinfection of pool water by means of a combination of filtration and the addition of chemicals to the water.~~

TURNOVER TIME is the ~~period of time, in hours, required~~ maximum time allowed to circulate one complete ~~a~~ volume of the pool water ~~equal to the pool capacity~~ through the recirculation system.

UNIFORMITY COEFFICIENT is the ratio of the theoretical size of a sieve in mm that will pass 60 percent of the sand to the theoretical size of a sieve in mm that will pass 10 percent of the sand.

WADING POOL is a pool intended to be used for wading by small children and having a maximum water depth of 18 inches (457 mm) at the deepest point.

WATER FEATURE means an interactive device or structure through which water is directed to the pool user such as a water fountain, water spray, dancing water jet, waterfall, dumping bucket or shooting water cannon.

WATERLINE shall be defined in one of the following ways:

1. **Skimmer system**. The waterline shall be the midpoint of the operating range of the skimmers.
2. **Overflow system.** The waterline shall be the top edge of the overflow rim.

NOTE: Authority cited: Section 131200 Health and Safety Code. Reference: Sections 116043 and 116050, Health and Safety Code.

DRAFT

DRAFT

3) Amend Section 3103B as follows:

PLAN REVIEW, PERMITS, CONSTRUCTION AND FIELD INSPECTIONS

SECTION. 3103B

~~SPECIAL POOL CLASSIFICATIONS~~ PLAN REVIEW

3103B.1 ~~Spa pool~~~~. A spa pool is a pool, not used under medical supervision, that incorporates a water jet system, an aeration system or a combination of the two systems, and which may also utilize artificially heated water. The surface water area of a spa pool shall not exceed 250 square feet (23 m²), and the water depth shall not exceed 4 feet (1219 mm). Note: See also Section 3119B.1.2.~~ A person proposing to construct, renovate or alter a pool, ancillary facilities or equipment and appurtenances shall submit plans and specifications detailing compliance with this Chapter to the enforcing agent for review and written approval prior to commencing construction and shall first be cleared by the enforcing agent before substitution if not an exact duplicate of the units being changed or replaced. A local building department shall not issue a permit for a public pool or ancillary facility until the plans have been approved by the enforcing agent.

3103B.2 ~~Special-purpose pool~~~~. A special-purpose pool is a pool intended to be used exclusively for a single purpose, such as wading, instruction, diving, competition, or for medical treatment where a licensed professional in the healing arts is in attendance.~~ Plans submitted for approval pursuant to this section shall be drawn to a scale of ¼ inch (6.4 mm) equals 1 foot (305 mm), except that plans for spa pools shall be drawn to a scale of 1 inch (25 mm) equals 1 foot (305 mm), unless otherwise approved by the enforcing agent.

DRAFT

3103B.3 ~~**Temporary training pool**. A temporary training pool is a pool intended to be used for instruction in swimming, having a maximum water depth of 36 inches (914 mm), and so constructed as to be readily disassembled for storage or for transporting to and reassembly to its original integrity at a different location. A temporary training pool shall be limited to a maximum use of three months at any one geographical location during any 12-month period.~~ Within 20 working days of the receipt of plans and specifications, the enforcing agent shall notify the person submitting the plans and specifications of approval or disapproval.

3103B.4 ~~**Wading pool**. A wading pool is a pool intended to be used for wading by small children and having a maximum depth of 18 inches (457 mm) at the deepest point and a maximum depth of 12 inches (305 mm) at side walls.~~ The enforcing agent shall retain one copy of the approved plans and specifications and any subsequent changes or modifications. The approved plans shall be valid for a period of two years from the date of approval or as extended by the enforcing agent.

NOTE: Authority cited: Section 131200 Health and Safety Code. Reference: Sections 116043 and 116050, Health and Safety Code.

DRAFT

4) Amend Section 3104B as follows:

SECTION 3104B

~~ACCESSIBILITY TO THE PHYSICALLY HANDICAPPED PERSON~~ CONSTRUCTION

~~Swimming pools and their appurtenances shall be in compliance with the requirements of the state architect for access to public accommodations by physically handicapped persons. Note: See Chapter 11 A.~~ Pools and all ancillary facilities, equipment and appurtenances shall be constructed, renovated or altered in compliance with plans approved pursuant to Section 3103B.

NOTE: Authority cited: Section 131200 Health and Safety Code. Reference: Sections 116043 and 116050, Health and Safety Code.

DRAFT

5) Amend Section 3105B as follows:

SECTION 3105B

~~ALTERNATE EQUIPMENT, MATERIALS AND METHODS OF CONSTRUCTION~~

PLAN COMPLIANCE INSPECTIONS

3105B.1 ~~The enforcing agency may approve an alternate equipment, material, or method of construction, provided it finds that the proposed design is satisfactory and complies with the provisions of this chapter, that the equipment, material, method or work offered is, for the purpose intended, at least equivalent to that prescribed in suitability, strength, effectiveness, fire resistance, durability, safety and sanitation, or that the methods of installation proposed conform to other acceptable nationally recognized standards, and providing the alternate has been approved and its use authorized by the enforcing agency.~~ The pool owner, operator or designated agent shall notify the enforcing agent at least two working days prior to scheduling the following inspections:

1. Exposed plumbing;
2. Prior to applying pneumatically placed concrete;
3. Prior to applying the final surface to the pool shell; and
4. At the completion of construction. No pool shall be opened to the public without the written approval of the enforcing agent.

NOTE: Authority cited: Section 131200 Health and Safety Code. Reference: Sections 116043 and 116050, Health and Safety Code.

DRAFT

6) Amend Section 3106B as follows:

POOL STRUCTURE

SECTION 3106B

~~POOL CONSTRUCTION~~ SPECIAL REQUIREMENTS FOR SPRAY GROUNDS

3106B Spray grounds. All applicable provisions of this Chapter shall apply to a spray ground unless specifically addressed in this section.

3106B.1 ~~Shell structural integrity~~ ~~The pool shall be designed and durably built of reinforced concrete, or material equivalent in strength, watertight, and able to withstand anticipated stresses under both full and empty conditions, taking into consideration climatic effect, geological conditions, integration of the pool with other structures and similar factors.~~ All parts of the spray ground shall be designed and constructed so that there are no safety hazards.

3106B.2 ~~Finish.~~ Walking surface. ~~The finished pool shell shall be lined with a smooth waterproof interior finish that will withstand repeated brushing, scrubbing and cleaning procedures. The interior pool finish shall completely line the pool to the tile lines, coping or cantilevered deck.~~ A minimum four-foot wide walking surface shall extend around the perimeter of the splash zone of a spray ground.

3106B.3 ~~3106B.3 Finish color~~. ~~The finish color shall be white except for:~~

~~1. Lane and other required pool markings described in Section 3109B;~~

~~2. Handholds;~~

~~3. Copings;~~

~~4. The top surface edges of benches; and~~

~~5. The edge of spa steps.~~

DRAFT

~~**Exception:** A spa pool shall be permitted to be finished in a light (pastel) color other than white when approved by the enforcing agency.~~

The recirculation system shall be in operation at all times that the spray ground is open for use and shall have a minimum of four turnover cycles prior to opening for proper disinfection and filtration.

3106B.4 There shall be no standing water within the splash zone.

3106B.5 Nozzles that spray from the ground level shall be flush with the ground with openings no greater than one-half inch. Spray ground water features that extend above the ground must be high enough so that they can be seen clearly and are not a trip hazard.

3106B.6 The splash zone shall be sloped so that only water from the spray ground water feature flows back to the surge basin. Areas adjacent to the splash zone shall be sloped away from the spray ground to deck drains or other surface water disposal systems.

3106B.7 All foggers and misters that produce finely atomized mists shall be supplied directly from a potable water source and not from the surge basin.

3106B.8 The control systems for the spray ground water feature pump and recirculation system pump shall be electrically interconnected so that when the recirculation pump is off, the spray ground water feature pump also is off.

3106B.9 The spray ground shall have a surge basin or treatment tank constructed of materials which are inert, corrosion resistant, nontoxic and watertight including materials such as concrete, fiberglass, high density polyethylene, stainless steel or other materials as approved by the enforcing agent which can withstand all anticipated

DRAFT

loadings under full and empty conditions as determined by an engineer or architect as defined in this Chapter.

3106B.10 The total volume of the surge basin shall be at least 4,000 gallons or a minimum of three times the gpm flow rate of all the spray ground pumps and the recirculation pump combined, whichever is higher.

3106B.11 The turnover time shall be one-half hour or less.

3106B.12 The suction intake for the spray ground or water feature pump in the surge basin shall be located adjacent to the recirculation return line.

3106B.13 When separate pumps are used, the suction intake for the recirculation pump shall be located in the lowest portion of the surge basin and on the opposite side from the suction intake for the spray ground pump.

3106B.14 The surge basin shall be designed to have easy access for cleaning and inspection. The basin shall have at least one ladder access and shall have at least one 3-foot by 3-foot access opening. Lids shall be locked or require a tool to open.

3106B.15 The surge basin shall be equipped with an automatic make up water fill device through an air gap or be protected by an approved backflow prevention device in accordance with Chapter 6 of the California Plumbing Code.~~as required by the California Department of Public Health under Sections 7601 to 7605, Article 2, Title 17, California Code of Regulations~~.

3106B.16 Ultraviolet light disinfection shall be used to supplement disinfection methods required in this Chapter unless another treatment process is provided that has been determined by a NRTL to be capable of providing at least the equivalent level of reduction of cryptosporidium as the ultraviolet light disinfection system specified in this

DRAFT

section. The ultraviolet light disinfection unit shall comply with the applicable requirements established by the NSF/ANSI 50-2010 performance standard effective August 2010.

3106B.17 An accurately calibrated ultraviolet light intensity meter that has been properly filtered to restrict its sensitivity to the disinfection spectrum shall be installed in the wall of the disinfection chamber at the point of greatest water depth from the light source.

3106B.18 The ultraviolet light unit shall be installed to provide treated water directly to the spray features.

3106B.19 The ultraviolet light disinfection system must be equipped with an automatic shutdown system that inactivates the water feature pump if the ultraviolet dosage rate drops below 40 mJ/cm^2.

3106B.20 Artificial lighting shall be provided at all spray ground pads which are used at night or which do not have adequate natural lighting so that all portions of the spray pad and deck may be seen easily. A minimum of three foot candles of light shall be provided for the spray ground. Lighting that may be exposed to the feature pool water shall be installed in accordance with the manufacturer's specifications and the California Electrical Code.

3106B.21 A diverter valve shall be installed on the spray ground drainage piping before the surge basin to divert rain water to the storm drainage system when the splash ground is closed for the season.

DRAFT

3106B.22 A removable and cleanable catch screen or basket shall be installed on the spray ground drainage system before it enters the reservoir to prevent larger debris from collecting in the surge basin.

NOTE: Authority cited: Section 131200 Health and Safety Code. Reference: Sections 116043 and 116050, Health and Safety Code.

DRAFT

7) Amend Section 3107B as follows:

SECTION 3107B

~~**ADDITIONAL REQUIREMENTS FOR A TEMPORARY TRAINING POOL**~~

ALTERNATIVE EQUIPMENT, MATERIALS AND METHODS OF CONSTRUCTION

3107B.1 ~~A temporary training pool shall comply with this section in addition to the provisions contained in Section 3106B.~~ The enforcing agent may approve an alternative equipment, material or method of construction provided it finds that the proposed design is satisfactory and complies with the provisions of this Chapter, that the equipment, material, method or work offered is, for the purpose intended, at least equivalent to that prescribed in suitability, strength, effectiveness, fire resistance, durability, safety and sanitation or that the methods of installation proposed conform to other acceptable nationally recognized standards.

~~**3107B.1.1 Installation site**. A temporary training pool shall be installed on a paved level surface extending at least 10 feet (3048 mm) beyond all pool walls.~~

~~**3107B.1.2 Cover.** The temporary training pool shall be provided with a solid cover. The cover shall be installed during periods when the pool is not open for use and shall be secured to the pool in a manner to prevent unauthorized removal.~~

~~**3107B.1.3 Design.** The pool cover shall be designed to support a uniform live load of 40 pounds per square foot (1.9 kN/m^2). The structural design of the pool and cover shall be approved by a California registered professional engineer.~~

3107B.2 -The enforcing agent shall require that sufficient evidence or proof be submitted to substantiate claims that may be made regarding the use of alternative equipment, material or method of construction.

DRAFT

3107B.3 Whenever there is insufficient evidence of compliance with the provisions of this Chapter, the enforcing agent may require tests as proof of compliance to be made at no expense to the enforcing agent. Tests shall be made in accordance with approved standards, but in the absence of such standards the enforcing agent may specify the test procedure.

NOTE: Authority cited: Section 131200 Health and Safety Code. Reference: Sections 116043 and 116050, Health and Safety Code.

DRAFT

8) Amend Section 3108B as follows:

SECTION 3108B

~~POOL GEOMETRY~~ POOL CONSTRUCTION

3108B.1 ~~Dimensions and Slopes.~~ Pool shell. ~~The dimensions and slopes of a pool shall conform to the appropriate Figure 31B-1 through 31B.3.~~

~~**Exception**: A special-purpose pool shall be permitted a depth greater than 3-1/2 feet (1067 mm) at the shallowest end.~~

The pool shall be built of reinforced concrete or material equivalent in strength, watertight and able to withstand anticipated stresses under both full and empty conditions taking into consideration factors such as climatic effects, geological conditions and integration of the pool with other structures.

3108B.2 ~~Drainable.~~ Finish. ~~The pool shall be completely drainable through a main drain which shall be located at the deepest point in the pool.~~ The finished interior pool shell shall have a solid waterproof finish that is smooth and slip resistant and that will withstand repeated brushing, scrubbing and cleaning procedures. The interior pool finish shall completely line the pool to the tile lines, coping or cantilevered deck.

3108B.3 ~~Dimensional tolerances~~. Finish color. ~~A construction tolerance shall be permitted on all dimensions in Figures 31B-1, 31B-2 and 31B-3, not to exceed 2 inches (51mm) except that the tolerance of the water level of a pool with a nonadjustable overflow system shall not exceed 1/8 inch (3.2 mm).~~ The finish color shall be white except for the following which shall be of contrasting color:

1. Lane and other required pool markings described in Section 3110B;
2. The top surface edges of benches in spa pools;

DRAFT

3. The edge of pool steps;

4. Tiles installed at the waterline; and

5. Tiles installed at the 4 1/2 foot (1372 mm) depth line.

Exception: A spa pool may be finished in a light color other than white when approved by the enforcing agent.

3108B.4 ~~**Slope break from shallow to deep water.**~~ **Projections and recessed areas.** ~~When a pool has a change in bottom slope from shallow to deep water, flush-mounted devices for fastening a safety rope and buoys across the pool shall be installed where the water depth is 4 1/2 feet (1372 mm).~~ The pool shell shall not have projections or recessed areas except for pool inlets and outlets as specified in Section 3137B.

Exception: This section shall not apply to handholds, recessed steps, ladders, stairs, handrails, skimmers or perimeter overflow systems.

NOTE: Authority cited: Section 131200 Health and Safety Code. Reference: Sections 116043 and 116050, Health and Safety Code.

DRAFT

9) Amend Section 3109B as follows:

SECTION 3109B

~~PERMANENT MARKINGS~~ POOL GEOMETRY

3109B.1 ~~Lane markings. Dimensions and slopes~~ General. ~~Slip-resistant lane lines or other markings at the bottom of the pool shall not exceed 12 inches (305 mm) in width.~~ A pool shall conform to the appropriate criteria in Figures 31B-1 through 31B-7.

Exception: A special purpose pool may be exempted from construction standards that are not applicable to the proposed use.

3109B.2 ~~Depth marking line~~. Dimensional tolerances. ~~There shall be installed a straight line of slip-resistant tile, 4 inches (102 mm) wide, of contrasting color across the bottom of the pool from where the water depth is 4 1/2 feet (1372 mm).~~

~~**Exception:** Pools having a maximum depth of five feet or less shall not be required to have a depth marking line.~~

A construction tolerance shall be permitted on all dimensions in Figures 31B-1 through 31B-3 not to exceed 2 inches (51 mm) except that the tolerance of the water level of a pool with a nonadjustable overflow system shall not exceed 1/8 inch (3.2 mm).

3109B.3 ~~Decorative designs.~~ Bottom slope break. ~~Designs on the bottom or walls of the pool which are shaped in a form that might reasonably be mistaken for, or give the illusion of being, a human form shall be prohibited~~. Any portion of a pool having a water depth of 4 1/2 feet (1372 mm) or less shall have a uniform slope that shall not exceed 1 foot (305 mm) of vertical in 10 feet (3050 mm) of horizontal. In pools with water depths greater than 4 1/2 feet (1372 mm), the slope shall meet the requirements

DRAFT

in Figures 31B-1 through 31B-3. There shall be a uniform water depth along the entire base of the stairs.

3109B.4 ~~**Water depth markers.**~~

~~**3109B.4.1 General.** The water depth shall be clearly marked at the following locations:~~

~~1. Maximum depth;~~

~~2. Minimum depth;~~

~~3. Each end;~~

~~4. At the break in the bottom slope between the shallow and deep portions of the pool (see also Section 3108B.4); and~~

~~5. On the perimeter of the pool at distances not to exceed 25 feet (7620 mm)~~

~~**Exception:** A spa or wading pool shall have a minimum of two depth markers indicating the maximum depth.~~

~~**3109B.4.2 Location.** Depth markers shall be located on the vertical pool walls at each end and side of the pool at or above the water level. If a pool exceeds 20 feet (6096 mm) in width, additional markers shall be located on the edge of the deck next to the pool.~~

~~**Exception:** If depth markers cannot be located on the vertical pool walls above the waterline because of the pool design, the depth markers shall be located so as to be clearly visible to bathers in the pool.~~

~~**3109B.4.3 Tolerance.** Depth markers shall be positioned to indicate the water depth accurate to the nearest 6 inches (152 mm).~~

~~**3109B.4.4 Size of markers.** Depth markers shall:~~

DRAFT

~~1. Have numerals a minimum of 3 inches (76 mm) in height and of a color contrasting with the background.~~

~~2. Be made of a durable material that is resistant to weathering, and~~

~~3. Be slip resistant when they are located on the pool deck.~~

NOTE: Authority cited: Section 131200 Health and Safety Code. Reference: Sections 116043 and 116050, Health and Safety Code.

DRAFT

10) Amend Section 3110B as follows:

SECTION 3110B

~~STEPS, RECESSED STEPS, LADDERS, AND RECESSED STAIRS (TREADS)~~

PERMANENT MARKINGS

3110B.1 ~~Construction.~~ General. ~~A means of entry and exit to and from the pool shall consist of steps, recessed steps, ladders or stairs, or a combination of them. One means of entry and exit shall be provided in the shallowest portion of a pool if the vertical distance from the bottom of the pool to the deck is over 2 feet (610 mm). A second means of entry and exit shall be provided in the deep portion of a pool having a depth greater than 4 1/2 feet (1372 mm). Where the width of the pool exceeds 30 feet (9144 mm), such means of entry and exit shall be provided at each side, not more than 100 feet (30,480 mm) apart.~~ No markings, designs or lettering shall be permitted on the pool shell except for slip resistant lane markings, depth marking lines and safety markings.

3110B.2 ~~Ladders~~ Lane markings. ~~Ladders with a handhold shall be corrosion resistant and shall be equipped with slip-resistant tread surfaces. Ladders shall be rigidly installed and shall provide a clearance of not less than 3 inches (76 mm) or more than 5 inches (127 mm) between any part of the ladder and the pool wall.~~ Slip resistant lane lines at the bottom of the pool shall not exceed 12 inches (305 mm) in width.

3110B.3 ~~Stairs.~~ Depth marking line. ~~Each step of a stair shall have the same dimensions with a tread not less than 12 inches (305 mm)wide, except that if the top step is curved convexly, the top step tread shall not be less than 18 inches (457 mm) wide as measured at the point of maximum curvature. Risers shall be uniform and shall~~

DRAFT

~~not exceed 12 inches (305 mm) in height. A safety railing shall be provided, extending from the deck to not less than a point above the top of the lowest step and with the upper railing surface not less than 28 inches (711 mm) above the deck.~~ There shall be installed a straight line of slip resistant tile a minimum of 4 inches (102 mm) and not greater than 6 inches (152 mm) wide of a color contrasting with the background of the pool shell across the bottom of the pool where the water depth is 4 1/2 feet (1372 mm).

Exception: Pools having a maximum water depth of 5 feet (1524 mm) or less shall not be required to have a depth marking line.

3110B.4 ~~**Steps and step holes.**~~ **Water depth markers.** ~~Steps and step holes shall have a minimum tread of 5 inches 9127 mm), width of 14 inches (356 mm) and shall be designed to be readily cleaned.~~

3110B.4.1 Location. The water depth shall be clearly marked at the following locations:

1. Maximum depth;
2. Minimum depth;
3. Each end;
4. Both sides at each end;
5. At the break in the bottom slope between the shallow and deep portions of the pool (see also Section 3109B.4); and
6. Along the perimeter of the pool at distances not to exceed 25 feet (7620 mm).

Exception: A spa or wading pool shall have a minimum of two depth markers indicating the maximum depth.

DRAFT

3110B.4.2 Position. Where required by Section 3110B.4.1, depth markers shall be located in the following positions:

1. On the coping or on the deck the depth markers shall be placed as close as possible but no more than 3 feet (914 mm) from the pool water; and
2. For pools with skimmer systems the depth markers shall be high at the waterline which typically will result in the depth markers being submerged approximately 50%; or
3. For pools with perimeter overflow systems where coping cantilevers over the gutter depth markers may be positioned at the face of the cantilevered coping, the back wall above the gutter or immediately below the waterline which will result in the depth markers being completely submerged; or
4. For pools with rim flow gutters depth markers shall be positioned immediately below the waterline which will result in the depth markers being completely submerged.

3110B.4.3 Tolerance. Depth markers shall be positioned to indicate the water depth accurate to the nearest 6 inches (152 mm) as measured at the waterline.

3110B.4.4 Size of markers. Depth markers shall:

1. Have numerals a minimum of 4 inches (102 mm) in height and of a color contrasting with the background and be marked in units of feet and inches. Abbreviations of FT and IN may be used in lieu of feet and inches; and
2. Be made of a durable material that is resistant to weathering; and
3. Be slip resistant when they are located on the pool deck.

DRAFT

3110B.5 ~~Hand railings.~~ No diving markers. ~~Hand railings shall be provided at the top of both sides and shall extend over the coping or edge of the deck for each ladder and step hole.~~ For pool water depths 6 feet (1830 mm) and shallower no diving markers with the universal symbol of no diving, which is a red circle with a slash through it superimposed over the image of a diver, shall be installed on the deck directly adjacent to the depth markers required by Section 3110B.4.1.. No diving markers shall comply with Section 3110B.4.4(2-3).

~~**3110B.6 Steps for a spa pool**. Each step of a spa pool shall have a tread width not less than 12 inches (305 mm). Risers shall not exceed 9 inches (229 mm) in height when one handrail is provided, or 12 inches (305 mm) in height when two handrails are provided. A handrail shall be installed over the steps, with the leading railing edge extending up to a point not less than 12 inches (305 mm) from the plane of the bottom riser. The steps shall be located where the deck is at least 4 feet wide (1219 mm).~~

NOTE: Authority cited: Section 131200 Health and Safety Code. Reference: Sections 116043 and 116050, Health and Safety Code.

DRAFT

11) Amend Section 3111B as follows:

SECTION 3111B

~~HANDHOLDS~~

STEPS, RECESSED STEPS, LADDERS~~,~~ AND STAIRS

3111B.1 ~~General.~~ Construction. ~~Every pool shall be provided with handholds (perimeter overflow system, bull-nosed coping or cantilevered decking) around the entire perimeter installed not greater than 9 inches (229 mm) above the waterline.~~

~~**Exception**: Handholds are not required for wading pools.~~

A means of entry and exit to and from the pool shall consist of steps, recessed steps, ladders, stairs, ramps or a combination of these. One means of entry and exit shall be provided in the shallowest portion of a pool if the vertical distance from the bottom of the pool to the deck is over 1 foot (305 mm). A second means of entry and exit shall be provided in the deep portion of a pool having a depth greater than 4 1/2 feet (1372 mm). Where the width of the pool exceeds 30 feet (9144 mm), such means of entry and exit shall be provided at each side, not more than 100 feet (30,480 mm) apart.

Note: For illustrated diagrams pertaining to this section see Figures 31B-6 and 31B-7.

3111B.2 Ladders. ~~For special-use pools used for instruction or competitive swimming, a handhold at water level similar to the rim of a perimeter overflow system is required.~~ Ladders shall be corrosion resistant and shall be equipped with slip resistant tread surfaces. Ladders shall be rigidly installed and shall provide a clearance of not less than 3 inches (76 mm) or more than 5 inches (127 mm) between any part of the ladder and the pool wall.

DRAFT

3111B.3 Stairs. ~~Where perimeter overflow systems are not provided, a bull-nosed coping or cantilevered decking or reinforced concrete, or material equivalent in strength and durability, with rounded, slip-resistant edges shall be provided. The overhang for either bull-nosed coping or cantilevered decking shall not exceed 2 inches (51 mm) or be less than 1 inch (25 mm) and shall not exceed 2 1/2 inches (64 mm) in thickness.~~

~~**Exception:** The enforcing agency may accept handholds other than those specified for spa pools.~~

Stairs shall be provided in the shallowest portion of a pool. In pools with more than one shallow end stairs shall be provided at each shallow end. Each step of a stair shall have a tread in accordance with Figure 31B-7. Risers shall be uniform and shall conform to Figure 31B-7. At least one hand rail shall be provided extending from the deck to not less than a point above the top of the lowest step installed in accordance with Figure 31B-7.

3111B.4 Recessed steps and step risers. Ladder treads and recessed steps shall have a minimum tread of 5 inches (127 mm) and a width of 14 inches (356 mm) and shall be designed to be readily cleaned. Step risers shall be uniform and shall not exceed 12 inches (305 mm) in height. The first riser shall be measured from the deck.

3111B.5 Hand rail~~ings~~s. Hand rails shall be provided at the top of both sides of each ladder and recessed steps and shall extend over the coping or edge of the deck.

3111B.6 Stairs for a spa pool. Each step of a spa pool stair shall have a tread dimension in accordance with Figure 31B-7. Risers shall not exceed 12 inches (305 mm) in height. Two hand rails shall be provided extending from the deck to not less

DRAFT

than a point above the top of the lowest step in accordance with Figure 31B-7. The steps shall be located where the deck is at least 4 feet (1219 mm) wide.

NOTE: Authority cited: Section 131200 Health and Safety Code. Reference: Sections 116043 and 116050, Health and Safety Code.

DRAFT

12) Amend Section 3112B as follows:

SECTION 3112B

~~DIVING BOARDS~~ HANDHOLDS

3112B.1 ~~General.~~ General. ~~Diving boards and their supports, platforms and steps shall be substantially constructed and shall be of sufficient structural strength to carry the maximum anticipated load. Steps shall be of corrosion-resistant material, easily cleanable and of slip-resistant design.~~ Every pool shall be provided with handholds (perimeter overflow system, bull-nosed coping or cantilevered decking) around the entire perimeter installed not greater than 9 inches (229 mm) above the waterline.

Exception: Handholds are not required for wading pools.

3112B.2 ~~Railings.~~ ~~Handrails shall be provided at all steps and ladders leading to diving boards more than 1 meter above the water, except those steps or ladders set 15 degrees or less from the vertical. Guardrails extending to a point on the platform directly above the water's edge shall be provided on both sides of all platforms and diving boards which are over 1 meter high. Guardrails shall be 36 inches (914 mm) above the platform or diving board.~~ For special purpose pools used for instruction or competitive swimming, a handhold at water level similar to the rim of a perimeter overflow system is required.

3112B.3 Where perimeter overflow systems are not provided, a bull-nosed coping or cantilevered decking of reinforced concrete, or material equivalent in strength and durability, with rounded slip resistant edges shall be provided. The overhang for either bull-nosed coping or cantilevered decking shall not exceed 2 inches (51 mm) or be less than 1 inch (25 mm) and shall not exceed 2 1/2 inches (64 mm) in thickness.

DRAFT

Exception: The enforcing agent may accept other handholds for spa pools.

NOTE: Authority cited: Section 131200 Health and Safety Code. Reference: Sections 116043 and 116050, Health and Safety Code.

DRAFT

13) Amend Section 3113B as follows:

Section 3113B

~~POOL DECKS~~ DIVING BOARDS AND PLATFORMS

3113B.1 - ~~General.~~ General. ~~A minimum continuous and unobstructed 4 foot (1219 mm) wide slip-resistant, nonabrasive deck area of concrete or like material shall be provided flush with the top of the pool shell wall extending completely around the pool, and the deck area shall further extend 4 feet (1219 mm) on both sides and rear of any diving board or slide and their appurtenances. The deck width shall be measured from the poolside edge of the coping lip.~~

~~Exceptions:~~

~~1. A deck at least 4 feet (1219 mm) in width shall extend around 50 percent or more of the perimeter of a spa pool. For spa pools that have their walls extending above the ground or floor level, the deck area requirement shall apply at the ground or floor level unless otherwise specified by the enforcing agency.~~

~~2. The deck width separating a spa pool from an adjacent pool shall not be less than 6 feet (1829 mm)wide.~~

~~3. The deck may be omitted from around a temporary training pool.~~

~~4. [DCA-AC] Any mechanism provided to assist persons with disabilities in gaining entry into the pool and in exiting from the pool shall comply with Chapter 11B, Section 1104B4.3, Participation Areas.~~

DRAFT

Diving boards and platforms shall be anchored to the pool deck, constructed of corrosion resistant material, designed and constructed to be easily cleanable and finished with a durable slip resistant material.

3113B.2 ~~Deck drainage.~~ Rails and steps. ~~The pool deck surfaces shall be sloped a minimum of 1/4 inch (6.4 mm) per foot to deck drains or other approved surface water disposal areas. The pool deck surface shall not drain into the pool, its perimeter overflow channel, into an adjoining spa or other pool or be connected to the recirculation system.~~

> ~~**Note:** A deck drain system of one 4 inch (102 mm) drain inlet per 400 square feet (37 m^2) of tributary deck area, with drains spaced 25 feet (7620 mm) apart, usually provides adequate surface water disposal.~~

Diving boards or platforms greater than 18 inches (456 mm) in height above the deck shall be provided with a ladder or stairs for access. Hand rails shall be provided at all ladders and stairs leading to diving boards or platforms more than 1 meter above the water. Diving boards and platforms that are over 1 meter above the water shall have guard rails on both sides of the diving board or platform that extend to a point on the platform directly above the water's edge. Guard rails shall be 36 inches (914 mm) above the diving board or platform.

3113B.3 ~~Coping~~. Dimensions. ~~Pool coping shall be slip resistant.~~ Dimensions and clearances for the use of diving boards or platforms shall conform to those shown in Figures 31B-1 and 31B-2. Platforms and diving boards greater than 3 meters above the water shall conform to the USA Diving Rules and Codes, Part 1, Subpart A and Appendix B, effective January 1, 2010.

DRAFT

~~**3113B.4 Coverings.** Artificial covering shall be permitted on the deck area when approved by the enforcing agency.~~

~~**Note**: Deck slopes to provide proper drainage may vary with the texture of the surface. It is recommended that the minimum slope be increased if artificial covering or exposed aggregate concrete surface is contemplated.~~

~~**3113B.5** Handrails shall be provided around the perimeter of any raised deck of a temporary training pool.~~

~~**3113B.6 Unpaved areas.** Landscape plants, flower beds or similar unpaved areas shall not be located within 4 feet (1219 mm) of a spa pool.~~

NOTE: Authority cited: Section 131200 Health and Safety Code. Reference: Sections 116043 and 116050, Health and Safety Code.

DRAFT

14) Amend Section 3114B as follows:

SECTION 3114B

~~POOL LIGHTING~~ POOL DECKS

3114B.1 ~~- General.~~ General. ~~Where pool lighting is provided, it shall be such that lifeguards or other persons may observe, without interference from direct and reflected glare from the lighting sources, every part of the underwater area and swimming pool surface, all diving boards or other pool appurtenances.~~

~~**Notes**: See (Part 3) Article 680 for electrical installation requirements.~~

A minimum continuous and unobstructed 4 foot wide (1219 mm) slip resistant, cleanable, nonabrasive deck area of concrete or like material shall be provided flush with the top of the pool coping extending completely around the pool, and the deck area shall further extend 4 feet (1219 mm) on both sides and rear of any diving board, fixed disabled access assistance device or slide and their appurtenances. The deck width shall be measured from the poolside edge of the coping lip.

Exception: A deck at least 4 feet (1219 mm) in width shall extend around a continuous 50 percent or more of the perimeter of a spa pool. For spa pools that have their walls extending above the ground or floor level, the deck area requirement shall apply at the ground or floor level unless otherwise approved in writing by the enforcing agent.

Note: [DCA-AC] Any mechanism provided to assist persons with disabilities in gaining entry into the pool and in exiting from the pool shall comply with Chapter 11B, Section 1104B4.3, Participation Areas.

DRAFT

3114B.2 ~~**Nighttime use.**~~ **Deck between pools and/or spas.** ~~Pools used at night shall be equipped with underwater light fixtures that will provide complete illumination to all underwater areas of the pool with no blind spots. Illumination shall enable a lifeguard or other persons to determine whether:~~

~~1. A bather is lying on the bottom of the pool, and~~

~~2. The pool water conforms to the definition of "Clear pool water".~~

~~**Exception:** Pools provided with a system of overhead lighting fixtures, where it can be demonstrated to the enforcing agency that the system is equivalent to the underwater fixture system.~~

Where multiple pools and/or spas are built adjacent to each other, the deck width separating them shall be a minimum of 6 feet (1830 mm).

3114B.3 ~~**Deck area lighting.**~~ **Deck slope.** ~~Where the pool is to be used at night, pool deck areas shall be provided with lighting so that persons walking on the deck can identify hazards. Lighting fixtures shall be aimed toward the deck area and away from the pool surface insofar as practical.~~ The pool's deck surface shall have a slope of no less than 1% (1/8 inch per foot) but no more than 2% (1/4 inch per foot) away from the pool to a deck drainage system and shall be constructed and finished to prevent standing water.

3114B.4 Deck covering. Deck coverings or other materials that are not equivalent to concrete in strength, durability and slip resistance and are not able to withstand repeated brushing, scrubbing or cleaning procedures shall not be installed or used within 4 feet (1219 mm) of the pool.

DRAFT

3114B.5 Unpaved areas. Landscape plants, flower beds or similar unpaved areas shall not be located within 4 feet (1219 mm) of a spa pool.

NOTE: Authority cited: Section 131200 Health and Safety Code. Reference: Sections 116043 and 116050, Health and Safety Code.

DRAFT

15) Amend Section 3115B as follows:

~~ANCILLARY AREAS AND FACILITIES~~

SECTION 3115B

~~BATHHOUSE, DRESSING, SHOWER, AND TOILET FACILITIES~~

POOL LIGHTING

3115B.1 General. ~~Shower and dressing facilities shall be provided for users of a pool.~~

~~**Exceptions:**~~

~~1. Shower and dressing facilities may not be required when bathers have access to such facilities in adjacent living quarters.~~

~~2. Public toilet facilities may be omitted when bathers have access to toilet facilities either in living quarters located not more than 300 feet (91,440 mm) in travel distance from the pool, or in an adjacent building such as a recreational facility, clubhouse or cabana.~~

Pools shall have underwater and deck lighting such that lifeguards or other persons may observe, without interference from direct and reflected glare from the lighting sources, every part of the underwater area and pool surface, all diving boards or other pool appurtenances. If underwater or deck surface lighting is not operational, the operator of the pool shall secure the pool area and not permit any use of the pool after dark and shall post the same sign as required in Section 3120B.9.

Note: See Part 3, Article 3-680, Title 24, California Code of Regulations for electrical installation requirements.

DRAFT

3115B.2 ~~**Number of sanitary facilities.**~~ **Nighttime use.** ~~For the purpose of this subsection, one bather shall be considered for every 15 square feet (1.39 m^2) of pool water surface area.~~

~~**3115B.2.1 Showers.** One shower shall be provided for every 50 bathers.~~

~~**3115B.2.2 Toilets.** Separate toilet facilities shall be provided for each sex. One toilet shall be provided for every 60 women, and one toilet plus one urinal for every 75 men.~~

~~**3115B.2.3 Lavatories**. One lavatory shall be provided for every 80 bathers.~~

Pools used at night shall be equipped with underwater lighting fixtures that will provide complete illumination to all underwater areas of the pool with no blind spots. Illumination shall enable a lifeguard or other persons to determine whether:

~~(1)~~1. A pool user is lying on the bottom of the pool; and

~~(2)~~2. The pool water conforms to the definition of "~~C~~clear pool water."

Exception: Pools provided with a system of overhead lighting fixtures where it can be demonstrated to the enforcing agent that the system is equivalent to the underwater lighting fixture system.

3115B.3 ~~**Construction.**~~ **Deck area lighting.**

~~**3115B.3.1 Floors.** Floors shall have a hard, nonabsorbent surface, such as portland cement concrete, ceramic tile or other approved material, which extends upwards onto the wall at least 5 inches (127 mm) with a coved base. Floors which may be walked on by a wet bather shall be slip resistant. Floors shall be sloped not less than 1/4 inch (6.4 mm) per foot to floor drains or other approved surface water disposal~~

DRAFT

~~areas. Carpeting and other similar artificial floor covering shall not be permitted on shower and toilet room floors.~~

~~**Note:** Rough rotary, raised rubber or wood float finish of concrete usually provides a slip-resistant finish.~~

~~**3115B.3.2 Interior wall surfaces.** The materials used in the walls, except for structural elements, shall be of a type which is not adversely affected by moisture.~~

~~**3115B.3.3 Privacy.** All doors and windows shall be arranged to prevent viewing of the interior from any portion of the building used by the opposite sex and from view from the outdoors. View screens shall be permitted for this purpose.~~

When the pool is to be used at night, pool deck areas and emergency egress areas shall be provided with ~~a minimum of 3 foot candle~~ lighting so that persons walking on the deck can identify hazards. Lighting fixtures shall be aimed towards the deck area and away from the pool surface insofar as practical.

~~**3115B.4 Water supply.**~~

~~**3115B.4.1** Showers and lavatories shall be provided with hot and cold water faucets.~~

~~**3115B.4.2** Tempered water shall be permitted in lieu of individual hot- and cold-water faucets.~~

~~**3115B.4.3** A means to limit the hot water to 110° F (61° C) maximum shall be provided to prevent scalding. This temperature limit control shall not be adjustable by the bather~~.

NOTE: Authority cited: Section 131200 Health and Safety Code. Reference: Sections 116043 and 116050, Health and Safety Code.

DRAFT

16) Amend Section 3116B as follows:

ANCILLARY FACILITIES

SECTION 3116B ~~DRINKING FOUNTAINS~~

TOILET, SHOWER AND DRESSING FACILITIES

~~One guarded jet drinking fountain shall be provided for the first 250 bathers and an additional fountain shall be provided for each additional 200 bathers or fraction thereof. The number of bathers shall be determined according to Section 3115B.2.~~

~~**Exception:** Drinking fountains shall not be required when drinking water is available at adjacent living quarters, or in an adjacent building such as a bathhouse, cabana, clubhouse or recreational facility.~~

3116B.1 Public toilets, showers and dressing facilities shall be provided for pool users. Except as otherwise noted, plumbing facilities and fixtures shall comply with the requirements of the California Plumbing Code.

Exception: Public toilet facilities may be omitted when pool users have access to toilet facilities either in living units located not more than 100 feet (30,126 mm) in travel distance from the pool or in an adjacent building such as a recreational facility, clubhouse, leasing office or cabana.

3116B.2 Sanitary facilities. For the purpose of this Section, one pool user shall be considered for every 15 square feet (1.39 m^2) of pool water surface area.

3116B.2.1 Showers. One shower shall be provided for every 50 pool users or less. Shower facilities, controls and fixtures shall comply with the requirements of the California Plumbing Code.

3116B.2.2 Toilets. Separate toilet facilities shall be provided for each sex. One toilet shall be provided for every 60 women or less and one toilet plus one urinal for every 75 men or less.

3116B.2.3 Lavatories. A minimum of one lavatory per toilet facility or one lavatory for every 80 pool users or less shall be provided. Lavatories shall comply with the requirements of the California Plumbing Code.

3116B.2.4 Soap Dispensers. Showers and lavatories shall be provided with soap and permanently installed soap dispensers.

3116B.2.5 Towels and Toilet Tissue. Single use towels or hot air blowers and toilet tissue shall be provided in permanently installed dispensing devices.

3116B.3 Construction.

3116B.3.1 Floors. Floors shall have a durable, nonabsorbent, slip resistant, nonskid surface such as concrete or ceramic tile which extends upward onto the wall at least 4 inches (101 mm) with a minimum 3/8 inch (9.6 mm) radius coved base. Floors which may be walked on by a wet pool user shall be slip resistant. Floors shall ~~slope not less than 1% (1/8 inch per foot) nor more than 2% (1/4 inch per foot) to floor drains and shall~~ be constructed and finished to prevent standing water and shall be drained to floor drains in such a manner that wastewater from one bather shall not pass over areas occupied by other bathers. Gutters in public shower rooms shall have rounded corners for easy cleaning and shall be sloped not less than 2 percent toward drains. Drains in gutters shall be placed at a maximum of 8 feet (2,438 mm) from the sidewalls and no more than 16 feet (4,877 mm) apart. Carpeting or other absorbent material is not permitted.

DRAFT

3116B.3.2 Interior surfaces. Interior surfaces such as walls, ceilings, doors, shower partitions, toilets, dressing facilities, locker rooms and lockers shall be smooth, free of open joints and cracks, nonabsorbent and cleanable.

3116B.3.3 Privacy. All doors and windows of any toilet, shower, dressing facility or locker room shall be arranged to prevent viewing of the interior from the exterior.

3116B.3.4 Indoor ventilation. For ventilation requirements for toilet and dressing facilities see Section 1203.1, Title 24, California Code of Regulations.

3116B.4 Water supply.

3116.B.4.1 Showers and lavatories shall be provided with hot and cold running water under pressure in accordance with the requirements of the California Plumbing Code.

3116B.4.2 Tempered water shall be permitted in lieu of individual hot and cold water faucets.

3116B.4.3 A means to limit the hot water to 110°F (61°C) maximum shall be provided to prevent scalding. This temperature limit control shall not be adjustable by the pool user.

NOTE: Authority cited: Section 131200 Health and Safety Code. Reference: Sections 116043 and 116050, Health and Safety Code.

DRAFT

17) Amend Section 3117B as follows:

SECTION 3117B

~~HOSE BIBBS~~ DRINKING FOUNTAINS

~~Hose bibbs shall be provided for each pool and located so that all portions of the pool deck area may be reached with a 75-foot (22,860 mm) length of hose attached to the hose bibb. Hose bibbs shall be located so that they do not constitute a safety hazard and shall be protected against backflow.~~ One guarded jet drinking fountain shall be provided within the pool enclosure for the first ~~250~~ 150 pool users and an additional guarded jet drinking fountain shall be provided for each additional ~~200~~ 150 pool users or less. The number of pool users shall be determined according to Section 3116B.2.

Exception: Drinking fountains shall not be required when drinking water is available in adjacent living units or in an adjacent building such as a recreational facility, clubhouse, leasing office or cabana.

NOTE: Authority cited: Section 131200 Health and Safety Code. Reference: Sections 116043 and 116050, Health and Safety Code.

DRAFT

18) Amend Section 3118B as follows:

SECTION 3118B

~~ENCLOSURE OF POOL AREA~~ HOSE BIBBS

~~**3118B.1 Enclosure.** The pool shall be enclosed by one or a combination of the following: a fence, portion of a building, wall or other approved durable enclosure. Doors, openable windows or gates of living quarters or associated private premises shall not be permitted as part of the pool enclosure. The enclosure, doors and gates shall meet all of the following specifications:~~

1. ~~The enclosure shall have a minimum effective perpendicular height of 5 feet (1524 mm) as measured from the outside as depicted in Figures 31B-4 and 31B-5~~
2. ~~Openings, holes or gaps in the enclosure, doors and/or gates shall not allow the passage of a 4-inch (102 mm) diameter sphere. The bottom of the enclosure shall be within 2 inches (51 mm) of the finished grade.~~
3. ~~The enclosure shall be designed and constructed so that it cannot be readily climbed by small children. Horizontal and diagonal member designs, which might serve as a ladder for small children, are prohibited. Horizontal members shall be spaced at least 48 inches (1219 mm) apart. Planters or other structures shall not be permitted to encroach upon the clear span area as depicted in Figure 31B-5. Chain link may be used provided that the openings are not greater than 1¾ (44 mm) inches measured horizontally.~~

~~**3118B.2 Gates.** Gates and doors opening into the pool enclosure shall also meet the following specifications:~~

DRAFT

1. ~~Gates and doors shall be equipped with self-closing and self-latching devices. The self-latching device shall be designed to keep the gate or door securely closed. Gates and doors shall open outward away from the pool except where otherwise prohibited by law. Hand-activated door- or gate-opening hardware shall be located at least 3½ feet (1067 mm) above the deck or walkway.~~
2. ~~Except as otherwise provided herein, gates and doors shall be capable of being locked during times when the pool is closed. Exit doors which comply with Chapter 10 shall be considered as meeting these requirements.~~

   ~~**Exception**: Doors leading from areas of hotels and motels, as defined in the Business and Professions Code Section 25503.16(b), which are open to the general public, e.g., restaurants, lobbies, bars, meeting rooms, and retail shops, need not be self-latching.~~
3. ~~The pool enclosure shall have at least one means of egress without a key for emergency purposes. Unless all gates or doors are so equipped, those gates and/or doors which will allow egress without a key shall be clearly and conspicuously labeled in letters at least 4 inches (102 mm) high "EMERGENCY EXIT."~~
4. ~~The enclosure shall be designed and constructed so that all persons will be required to pass through common pool enclosure gates or doors in order to gain access to the pool area. All gates and doors exiting the pool area shall open into a public area or walkway accessible by all patrons of the pool.~~

~~**3118B.3 Retroactivity.** Sections 3118B.1 and 3118B.2 shall apply only to a public swimming pool constructed on or after July 1, 1994.~~

DRAFT

~~**3118B.4 Enclosure of pools constructed prior to July 1, 1994.** When the physical characteristics of a site preclude providing a 4-foot (1219 mm) deck around the perimeter of an existing pool, the enforcing agent may allow the installation of an enclosure which reduces the pool deck to less than 4 feet (1219 mm) in width.~~

Potable water outlets with hose attachments shall be protected by a nonremovable hose bibb backflow preventer, a nonremovable hose bibb vacuum breaker, or by an atmospheric vacuum breaker installed not less than 6 inches (152 mm) above the highest point of usage located on the discharge side of the last valve as required by the California Plumbing Code. In climates where freezing temperatures occur, a listed self-draining frost-proof hose bibb with an integral backflow preventer or vacuum breaker shall be used. Hose bibbs shall be provided so that all portions of the pool deck area may be reached with a 75 foot length of hose attached to the hose bibb. A hose bibb shall be provided in the equipment area. Hose bibbs shall be located so that they do not constitute a hazard. ~~and shall be protected by a backflow prevention device as required by the California Department of Public Health under Sections 7601 to 7605, Article 2, Title 17, California Code of Regulations.~~

NOTE: Authority cited: Section 131200 Health and Safety Code. Reference: Sections 116043 and 116050, Health and Safety Code.

DRAFT

19) Amend Section 3119B as follows:

SECTION 3119B

~~SIGNS~~ POOL ENCLOSURE

3119B.1 ~~Occupant load sign.~~ Enclosure. ~~A sign with clearly legible letters not less than 4 inches (102mm) high shall be posted in a conspicuous place near the main entrance to a pool which shall indicate the number of occupants permitted for each pool.~~

~~**3119B.1.1 Spa pool.** The occupant capacity of a spa pool shall be based on one bather for every 10 square feet (0.929 m^2) of pool water surface area.~~

~~**3119B1.2 Other pools.** The occupant capacity of all other pools shall be based on one bather for every 20 square feet (1.858 m^2) of pool water surface area.~~

~~**Exception:** Occupant capacity requirements do not apply to wading pools.~~

The pool shall be enclosed by one or a combination of the following: a fence; portion of a building; wall; or other approved durable enclosure. Doors, windows gates of living units or associated private premises shall not be permitted as part of the pool enclosure. The enclosure, doors and gates shall meet all of the following specifications:

1. The enclosure shall have a minimum effective perpendicular height of 5 feet (1524 mm) as measured from the outside as depicted in Figure 31B-4;
2. Openings, holes or gaps in the enclosure, doors and/or gates shall not allow the passage of a 4-inch (102 mm) diameter sphere. The enclosure shall be constructed over a hard and permanent material equivalent to concrete; and
3. The enclosure shall be designed and constructed so that it cannot be readily climbed by small children. Horizontal and diagonal member designs which might serve as a ladder for small children are prohibited. Horizontal members shall be

DRAFT

spaced at least 48 inches (1219 mm) apart. No planters or other structures that can be climbed shall be permitted within 5 feet (1524 mm) of the outside of the pool enclosure or within a 5 foot (1524 mm) arc as depicted in Figure 31B-5. The area 5 feet (1524 mm) outside of the pool enclosure shall be a common area open to the public.

4. Chain link may be used~~,~~ provided that the openings are not greater than 1¾ inches (44 mm) measured horizontally.

3119B.2 ~~Signs for shallow pool.~~ Gates. ~~Signs with clearly legible letters not less than 4 inches (102 mm) high shall be posted in a conspicuous place and shall state: NO DIVING ALLOWED.~~ Gates and doors opening into the pool enclosure also shall meet the following specifications:

1. Gates and doors shall be equipped with self closing and self latching devices. The self latching device shall keep the gate or door securely closed. Gates and doors shall open outwardly away from the pool except where otherwise prohibited by law. Hand activated door or gate opening hardware shall be located at a height no lower than 42 inches (1067 mm) but no higher than 44 inches (1179 mm) above the deck or walkway; and
2. Gates and doors shall be capable of being locked during times when the pool is closed. Exit doors which comply with Chapter 10, Title 24, California Code of Regulations shall be considered as meeting these requirements; and
3. The pool enclosure shall have at least one means of egress without a key for emergency purposes. Unless all gates or doors are so equipped, those gates

DRAFT

and/or doors which will allow egress without a key shall have a sign in letters at least 4 inches (102 mm) high stating EMERGENCY EXIT; and

4. The enclosure shall be constructed so that all persons will be required to pass through common pool enclosure gates or doors in order to gain access to the pool area. All gates and doors exiting the pool area shall open into a public area or a walkway accessible by all patrons of the pool.

~~3119B.3 Warning signs for pools using gas chlorine.~~ Retroactivity. ~~Pools at which gas chlorine is used for disinfection shall have a conspicuously posted sign on the exterior side of the entry door to the chlorine room, or on the adjacent wall area. In addition to displaying the appropriate hazard identification symbol for gas chlorine, the sign shall state with clearly legible letters not less than 4 inches (102 mm) high the following: DANGER: GASEOUS OXIDIZER - CHLORINE.~~ Sections 3119B.1 and 3119B.2 shall apply only to public pool enclosures constructed on or after July 1, 1994. Notwithstanding the foregoing effective date, no fence enclosure shall be less than 4 feet (1219 mm) in height.

3119B.4 ~~Warning signs for pools without pool lighting.~~ Enclosure of pools constructed prior to July 1, 1994. ~~Where pool lighting fixtures which comply with section 3114B are not provided, a sign with clearly legible letters not less than 4 inches (102 mm) high shall be posted in a prominent place near each entrance to the pool area. This sign shall state: NO USE OF POOL ALLOWED AFTER DARK.~~ The enforcing agent may allow the installation of an enclosure which reduces the pool deck to less than 4 feet (1219 mm) in width when the physical characteristics of a site

DRAFT

preclude providing a 4-foot (1219 mm) wide deck around the perimeter of an existing pool.

~~**3119B.5 Warning sign for a spa pool.** A precaution sign with clearly legible letters shall be posted in a prominent place near the entrance to a spa pool which shall contain the following language:~~

~~CAUTION~~

1. ~~Elderly persons, pregnant women, infants and those with health conditions requiring medical care should consult with a physician before entering a spa.~~
2. ~~Unsupervised use by children under the age of 14 is prohibited.~~
3. ~~Hot-water immersion while under the influence of alcohol, narcotics, drugs or medicines may lead to serious consequences and is not recommended.~~
4. ~~Do not use alone.~~
5. ~~Long exposure may result in nausea, dizziness or fainting.~~

~~**3119B.6 Approved signs**. Approved signs shall be maintained in a legible manner.~~

NOTE: Authority cited: Section 131200 Health and Safety Code. Reference: Sections 116043 and 116050, Health and Safety Code.

DRAFT

20) Amend Section 3120B as follows:

SECTION 3120B

~~INDOOR POOL VENTILATION~~ REQUIRED SIGNS

~~A pool located indoors shall be ventilated according to acceptable engineering principles.~~

~~**Note:** See Section 1202.2 for ventilation requirements for dressing and toilet rooms.~~

3120B.1 General. All signs shall have clearly legible letters or numbers not less than 4 inches (102 mm) high, unless otherwise required in this section, affixed to a wall, pole, gate or similar permanent structure in a location visible to all pool users.

3120B.2 Pool user capacity sign. A sign shall indicate the maximum number of pool users permitted for each pool.

3120B.2.1. Spa pool. The pool user capacity of a spa pool shall be based on one pool user for every 10 square feet (0.929 m²) of pool water surface area.

3120B.2.2. Other pools. The pool user capacity for all other pools shall be based on one pool user for every 20 square feet (1.858 m²) of pool water surface area.

Exception: Pool user capacity requirements do not apply to wading pools or spray grounds.

3120B.3. No diving sign. Signs shall be posted in conspicuous places and shall state, “NO DIVING” at pools with a maximum water depth of 6 feet or less.

3120B.4 No lifeguard sign. Where no lifeguard service is provided, a warning sign shall be posted stating, “WARNING: NO LIFEGUARD ON DUTY.” The sign also shall state in letters at least 1 inch (25 mm) high, "Children under the age of 14 shall not use pool without a parent or adult guardian in attendance.”

DRAFT

3120B.5 Artificial respiration and CPR sign. An illustrated diagram with text at least 1/4 inch (6 mm) high of artificial respiration and CPR procedures shall be posted.

3120B.6 Emergency sign. The emergency telephone number 911, ~~or~~ the number of the nearest emergency services and the name and street address of the pool facility shall be posted.

3120B.7 Warning sign for a spa pool. A warning sign for spa pools shall be posted stating, "CAUTION" and shall include the following language in letters at least 1 inch (25 mm) high:

1. Elderly persons, pregnant women, infants and those with health conditions requiring medical care should consult with a physician before entering the spa.
2. Unsupervised use by children under the age of 14 is prohibited.
3. Hot water immersion while under the influence of alcohol, narcotics, drugs or medicines may lead to serious consequences and is not recommended.
4. Do not use alone.
5. Long exposure may result in hyperthermia, nausea, dizziness or fainting.

3120B.8 Emergency ~~shut-off~~ shut off. In letters at least one inch (25 mm) high a sign shall be posted at the spa emergency ~~shut-off~~ shut off switch stating, "EMERGENCY ~~SHUT-OFF~~ SHUT OFF SWITCH."

3120B.9 No use after dark. Where pools were constructed for which lighting was not required, a sign shall be posted at each pool entrance on the outside of the gate(s) stating, "NO USE OF POOL ALLOWED AFTER DARK."

3120B.10 Keep closed. A sign shall be posted on the exterior side of gates and doors leading into the pool enclosure area stating, "KEEP CLOSED."

DRAFT

3120B.11 Diarrhea. A sign in letters at least 1 inch (25 mm) high and in a language or diagram that is clearly stated shall be posted at the entrance area of a public pool which states that persons having currently active diarrhea or who have had active diarrhea within the previous 14 days shall not be allowed to enter the pool water.

3120B.12 Wave pools. A sign in letters at least 1 inch (25 mm) high shall be posted that describes the requirements for wave pools as described in Section 115952, Health and Safety Code.

3120B.13 Spray Ground Sign. A sign shall be posted at each spray ground and be visible from any part of the spray ground that states, "CAUTION: WATER IS RECIRCULATED. DO NOT DRINK."

3120B.14 Exit. Where automatic chlorine ~~gaseous~~ chemical feeders are used, a sign shall be posted at the pool area entrance which shows in a diagrammatic form an emergency evacuation procedure. Designated emergency exits shall be marked "EXIT."

3120B.15 Gaseous Oxidizer. Where automatic gaseous chemical feeders are used, a warning sign with the appropriate hazard identification symbol shall be posted on the exterior side of the door entering the chemical feeder room or area. The sign shall state, "DANGER: GASEOUS OXIDIZER - *(specific chemical name)*," or as otherwise required by the California Fire Code.

3120B.16 Turn on before entering. Where automatic gaseous chemical feeders are used, a sign shall be posted at the switch to the light and ventilation system for the gaseous chemical feeder room stating, "TURN ON BEFORE ENTERING," or as otherwise required by the California Fire Code or the California Electrical Code.

DRAFT

3120B.17 Direction of flow.

3120B.17.1. The direction of flow for the recirculation equipment shall be labeled clearly with directional symbols such as arrows on all piping in the equipment area.

3120B.17.2. Where the recirculation equipment for more than one pool is located on site, the equipment shall be marked as to which pool the system serves.

3120B.17.3. Valves and plumbing lines shall be labeled clearly with the source or destination descriptions.

NOTE: Authority cited: Section 131200 Health and Safety Code. Reference: Sections 116043 and 116050, Health and Safety Code.

DRAFT

21) Amend Section 3121B as follows:

SECTION 3121B

~~FOUNDATIONS FOR POOL EQUIPMENT~~ INDOOR POOL VENTILATION

~~Pool equipment shall be mounted on a portland cement concrete or other easily cleanable nonabsorbent floor material. Floors shall be sloped a minimum of 1/4 inch (6.4 mm) per foot to drains or other drainage disposal methods approved by the local enforcing agency~~. ~~A pool area located indoors shall be ventilated according to the ANSI/American Society of Heating, Refrigerating and Air-Conditioning Engineers Standard 62.1-2010.~~ Indoor pools, dressing rooms and toilet rooms shall be ventilated according to the requirements in Chapter 4 of the California Mechanical Code.

NOTE: Authority cited: Section 131200 Health and Safety Code. Reference: Sections 116043 and 116050, Health and Safety Code.

DRAFT

22) Amend Section 3122B as follows:

SECTION 3122B

~~GAS CHLORINATION EQUIPMENT ROOM~~ POOL EQUIPMENT ENCLOSURE

~~Compressed chlorine gas storage containers and associated chlorinating equipment, when installed indoors, shall be in a separate room of not less than 1-hour fire-resistive construction and shall comply with all of the following sections:~~ For pools constructed on or after January 1, 2013, pool equipment shall be enclosed as follows:

1. All equipment installed for recirculation, filtration and disinfection of pool water shall be installed so that access is limited to persons authorized by the pool owner or operator;
2. Pool equipment shall be mounted on a continuous slab of concrete or other equivalent easily cleanable and nonabsorbent material; and
3. Floors shall be sloped a minimum of ¼ inch (6.4 mm) per foot to a drain.

~~**3122B.1 Location.** The room shall not be located in a basement or below ground.~~

~~**3122B.2 Entry.** The entry door to the room shall open to the exterior of the building or structure and shall not open directly toward the pool or pool deck.~~

~~**3122B.3 Ventilation.** A mechanically operated exhaust ventilation system shall be provided sufficient to produce 60 air changes per hour. The exhaust ventilation shall be taken at a point at or near the floor level. The system shall be vented to the outside air, and at the point of discharge shall be at least 10 feet (3048 mm) from any openable windows, an adjacent building, and above the adjoining grade level. Fresh-air intakes directly communicating with the outdoors shall be located within 6 inches (152 mm) of the ceiling.~~

DRAFT

NOTE: Authority cited: Section 131200 Health and Safety Code. Reference: Sections 116043 and 116050, Health and Safety Code.

DRAFT

23) Amend Section 3123B as follows:

RECIRCULATION ~~AND TREATMENT~~ SYSTEM COMPONENTS

SECTION 3123B

GENERAL REQUIREMENTS

3123B.1 System description. Each pool shall be provided with a separate recirculation ~~and treatment~~ system designed for the continuous recirculation, filtration and disinfection of the pool water. The system shall consist of pumps, filters, chemical feeders, skimmers or perimeter overflow systems, ~~and all~~ valves, pipes, connections, fittings and appurtenances.

Exception: Pools using fresh water equivalent in flow to the requirements of ~~Sec.~~ Section 3124B.

Notes:~~1.~~ Fresh makeup pool water shall conform to the water quality ~~physical and bacteriological~~ standards of Section 65531, Chapter 20, Title 22, California Code of Regulations..

~~2. Two spa pools shall be permitted to share one recirculation and treatment system, providing the flow and chlorination feed rate to each spa pool is individually metered and adjustable.~~

3123B.2 ~~Installation~~. Equipment. ~~All recirculation and treatment system components shall be installed according to this code and in accordance with the equipment manufacturer's written instructions.~~ All pumps, filters, chemical feeders, skimmers and supplemental equipment shall comply with the applicable requirements established by the NSF/ANSI 50-2010 performance standard effective August 2010.

DRAFT

3123B.3 ~~**Accessibility.**~~ **Installation.** ~~All filters, valves, pumps, strainers and equipment requiring adjustment shall be readily accessible for repair and replacement.~~

~~**Note:** Readily accessible means capable of being reached quickly for operation, renewal or inspections, without requiring those to whom ready access is requisite to climb over or remove obstacles or to resort to portable ladders, chairs, etc~~.

All equipment related to pool operations shall be installed and maintained according to this Chapter and in accordance with the equipment manufacturer's written instructions.

3123B.4 Accessibility. All filters, valves, pumps, strainers and equipment shall be readily accessible for repair and replacement.

NOTE: Authority cited: Section 131200 Health and Safety Code. Reference: Sections 116043 and 116050, Health and Safety Code.

DRAFT

24) Amend Section 3124B as follows:

SECTION 3124B

TURNOVER TIME.

The recirculation ~~and purification~~ system shall have ~~sufficient~~ the capacity to provide a complete turnover of pool water in:

1. One-half hour or less for a spa pool;
2. ~~One hour or less for a wading pool.~~ One-half hour or less for a spray ground;
3. ~~Two hours or less for a temporary training pool~~. One hour or less for a wading pool;
4. ~~Six hours or less for all other types of public pools~~. Two hours or less for a ~~temporary training~~ medical pool; and
5. Six hours or less for all other types of public pools.

NOTE: Authority cited: Section 131200 Health and Safety Code. Reference: Sections 116043 and 116050, Health and Safety Code.

DRAFT

25) Amend Section 3125B as follows:

SECTION 3125B

RECIRCULATION PIPING SYSTEM AND COMPONENTS

3125B.1 Line sizes. ~~Piping systems, including all parts and fittings other than inlet devices or venturi throats,~~ Pipes shall be sized so ~~that the~~ flow velocity of piping systems including all parts and fittings other than inlet devices or venturi throats shall not exceed ~~10 feet per second (3.048 m/s) excepting that the flow velocity shall not exceed 8 feet per second (2.438 m/s) in any copper piping or in any pump suction piping.~~ 6 feet per second (1.829 m/s) in any suction or copper piping and 8 feet per second (2.438 m/s) in any portion of the return system.

3125B.1.1 Materials All pipe, tube and fittings shall comply with the applicable standards for potable water system materials set forth in Chapter 6 of the California Plumbing Code.

3125B.2 ~~Gages~~ Gauges ~~for filters.~~ A pressure and vacuum ~~gage~~ gauge shall be provided ~~on~~ for each ~~filter~~ pump system ~~influent and effluent line~~. Each ~~gage~~ gauge shall have a scale range approximately 1¼ times the maximum anticipated working pressure or vacuum and shall be accurate within 2 percent of scale. ~~A vacuum gage shall be provided for suction-type filters~~.

3125B.3 Flow meter. ~~The recirculation system shall be provided with a flow meter,~~ A flow meter shall be provided on each recirculation system accurate to within 10 percent of ~~actual~~ flow and installed according to the manufacturer's written instructions with increments in the range of normal flow.

DRAFT

3125B.4 Basket ~~S~~strainers~~s~~. A basket ~~hair and lint~~ strainer shall be provided on the suction side of the recirculation pump. A basket strainer will not be required on pumps connected to vacuum filters where the filter elements are not removed for cleaning.

~~**Exception:** A pump used with a vacuum filter where the filter elements are not removed for cleaning~~

3125B.5 Backwash piping. Piping, including necessary valves conforming to Section 3125B.1, shall be provided for each filter vessel or element which ~~is of a type requiring~~ requires periodic backwashing.

3125B.6 Valves. Valves ~~shall be accessible for operation and repair and~~ shall not be located ~~under~~ in any ~~required~~ deck area surrounding a pool. Valves~~, or other approved means of control,~~ shall be installed on all recirculation, backwashing and drain system lines which require shutoff isolation, adjustment or control of the rate of flow. Each valve shall be installed in the equipment area and ~~identified with appropriate markings affixed directly to or near the valve~~ labeled as to its purpose.

NOTE: Authority cited: Section 131200 Health and Safety Code. Reference: Sections 116043 and 116050, Health and Safety Code.

DRAFT

26) Amend Section 3126B as follows:

SECTION 3126B

RECIRCULATION PUMP CAPACITY.

3126B.1 Pool recirculation ~~P~~pumps shall have ~~design capacity at~~ the following ~~heads~~ total dynamic head capacities:

1. **Pressure diatomaceous earth filters.** At least 60 feet (18,288 mm);
2. **Vacuum diatomaceous earth filters**. Twenty inches (508 mm) vacuum on the suction side and 40 feet (12,192 mm) total dynamic head;
3. **Rapid sand filters** - At least 45 feet (13,716 mm);
4. **High rate sand filters** - At least 60 feet (18,288 mm); and
5. **Cartridge filters** - At least 60 feet (18,288 mm).

3126B.2 Pumps with other ~~hydraulic (flow-head) characteristics~~ total dynamic head capacities shall be permitted ~~which comply with the flow capacity in Section 3124B~~ provided the turnover times are maintained as required in Section 3124B.

NOTE: Authority cited: Section 131200 Health and Safety Code. Reference: Sections 116043 and 116050, Health and Safety Code.

DRAFT

27) Amend Section 3127B as follows:

SECTION 3127B

WATER SUPPLY INLETS

3127B.1 General. Each ~~The~~ pool shall be supplied with potable water by means of a permanently installed pipeline from a public water supply system holding a permit from the California Department of Public Health or from ~~another approved~~ a source approved by the enforcing agent.

~~**Exception:** The enforcing agency may exempt spa pools, temporary pools and pools less than 1,500 gallons (5876 L) capacity from having to use permanently installed fill lines.~~

3127B.2 Backflow prevention. There shall ~~not be a~~ be no direct connection between any ~~domestic~~ potable water supply system and the pool or its piping system unless protected ~~against backflow in an approved manner~~ by a backflow prevention device ~~as required by the California Department of Public Health under Sections 7601 to 7605, Article 2, Title 17, California Code of Regulations~~in accordance with Chapter 6 of the California Plumbing Code.

~~**3127B.3 Air-gap separation for pool fill inlets.** Water supply inlets to a pool shall be installed not less than 1 inch (25 mm) or less than two pipe diameters above the overflow rim of the pool. Over-the-rim spouts shall be installed under a diving board or shall be properly guarded to prevent tripping.~~

~~**Exception**: Vacuum breakers, or other backflow prevention devices, may be used instead of air-gap separation. Such devices shall be installed on the discharge side of~~

DRAFT

~~the last inlet valve with the critical level not less than 6 inches (152 mm) above the overflow rim of the swimming pool.~~

NOTE: Authority cited: Section 131200 Health and Safety Code. Reference: Sections 116043 and 116050, Health and Safety Code.

DRAFT

28) Amend Section 3128B as follows:

SECTION 3128B

FILTERS (ALL TYPES)

3128B.1 General requirements. All filters, regardless of type, shall be designed and constructed according to the applicable requirements established by the NSF/ANSI 50-2010 performance standard effective August 2010. ~~to withstand normal continuous use without deterioration which could affect filter operation. Each filter shall comply with all of the following provisions:~~

~~1. Maintain clean and clear pool water under anticipated operating conditions.~~

~~2. Structural or functional failures shall not permit the passage of unfiltered water.~~

~~3. Filtration surfaces shall be easily disassembled and inspected.~~

~~4. Filtration surfaces shall be easily restored to the design capacity.~~

~~5. Filter parts shall be capable of resisting electrolytic corrosion (galvanic electric currents) due to the use of dissimilar metals.~~

3128B.2 ~~Minimum pressure drop~~. Installation. ~~The maximum pressure drop of a pressure-type filter, measured from the filter housing inlet to the filter housing discharge, shall not exceed 3 pounds per square inch gage (psig) (20.68 kPa gage) when initially operating at design flow rate.~~ Each filter vessel shall be installed, piped and provided with valves so that it can be isolated from the recirculation system for repairs and backwashing.

3128B.3 ~~Installation.~~ ~~Each filter vessel and element shall be installed, piped and provided with necessary valves so that it can be isolated from the system for repairs and backwashed individually.~~

DRAFT

~~**3128B.4 Air release**. When the design of the filter perm its accumulation of air in the top of the housing or vessel, the filter vessel shall be equipped with an air-release valve connected at the top of the housing that will expel air which enters the filter vessel or tank~~.

~~**3138B.5 Underdrain system.** The underdrain system for sand filters shall provide uniform distribution and collection of the flow during filtering and backwashing. The underdrain system shall be constructed of corrosion-resistant material and shall be non-clogging.~~

~~**3128B.6 Freeboard.** For sand filters, not less than 10 inches (254 mm) of freeboard shall be provided between the upper surface of the filter sand and the lowest portion of the pipes or drains which serve as overflows during backwashing.~~

NOTE: Authority cited: Section 131200 Health and Safety Code. Reference: Sections 116043 and 116050, Health and Safety Code.

DRAFT

29) Amend Section 3129B as follows:

SECTION 3129B

RAPID SAND PRESSURE FILTERS

In addition to the requirements for all filters as indicated in Section 3128B, the following apply to rapid sand pressure filters.

3129B.1 Flow rates. The filtration rate shall not exceed 3 ~~gallons per minute~~ gpm per square foot (122.24 L/m per m²) of filter area. The ~~design~~ backwash rate shall not be less than ~~12~~ 15 gpm per square foot (~~488.96~~ 611.2 L/m per m²) of filter area.

3129B.2 Filter media. The filter shall contain not less than a 20-inch~~es~~ (508 mm) ~~of~~ depth of ~~sand~~ media and not less than a 10-inch~~es~~ (254 mm) depth of filter gravel above the underdrain system.

3129B.2.1 The filter ~~sand~~ media shall have an effective particle size ~~of 0.3 to 0.5 mm~~ between 0.40 and 0.55 millimeters and a uniformity coefficient ~~of not more than~~ not exceeding 1.75.

3129B.2.2 The filter gravel shall be ~~graded~~ sized and placed to provide uniform flow distribution from the underdrain system and to support the bed of filter sand without loss of sand to the pool or without development of jet streams or channeling in the filtration media.

~~**3129B.3 Coagulant addition.** Facilities with dosage control features shall be provided for adding coagulating chemicals ahead of the filter when required by the enforcing agency.~~

NOTE: Authority cited: Section 131200 Health and Safety Code. Reference: Sections 116043 and 116050, Health and Safety Code.

DRAFT

30) Amend Section 3130B as follows:

SECTION 3130B

DIATOMACEOUS EARTH FILTERS

In addition to the requirements for all filters as indicated in Section 3128B, the following apply to diatomaceous earth filters.

3130B.1 Flow rates. The filtration rate for both pressure and vacuum ~~type~~ diatomaceous earth filters shall not exceed 2 gpm per square foot (81.49 L/m per m²) ~~excepting that filters designed for continuous feeding of filter aid shall not exceed 2½ gpm per square foot (101.87 L/m per m²)~~ of filter area.

~~**Note:** See also Section 3128B for other requirements.~~

~~**3130B.2 Precoating.** Provisions shall be made for precoating with diatomaceous earth filter aid. Continuous feeding of filter aid shall be required in a pool with a water surface area 2000 square feet (186 m²) or more, and the continuous feeding equipment shall be capable of feeding not less than 0.1 pound (0.045 kg) per 24 hours per square foot (0.093 per m²) of filter area.~~

NOTE: Authority cited: Section 131200 Health and Safety Code. Reference: Sections 116043 and 116050, Health and Safety Code.

DRAFT

31) Amend Section 3131B as follows:

SECTION 3131B

HIGH-RATE SAND FILTERS

In addition to the requirements for all filters as indicated in Section 3128B, the following apply to high rate sand filters.

3131B.1 Flow rates. Maximum and minimum flow rates for backwash and filtration shall be maintained according to the applicable requirements established by the NSF/ANSI 50-2010 performance standard effective August 2010.

3131B.2 ~~**Permissible use.** Sand filters operating at filtration rates higher than the maximum rate specified in Section 3129B shall be permitted by the enforcing agency under the conditions as set forth in Section 3105B.~~ The filter media shall have an effective particle size between 0.40 and 0.55 mm and a uniformity coefficient not exceeding 1.75.

3131B.3 ~~**Design and operating requirements**. A sand filter permitted under Sections 3105B.1, 3105B.2 and 3105B.3 shall comply with the following requirements instead of the requirements contained in Section 3129B.~~

~~1. The filter shall contain not less than 12 inches (305 mm) of depth of filter sand.~~

~~2. The filter sand shall not have an effective particle size greater than 0.45 mm and a uniformity coefficient not greater than 1.50.~~

~~3. The design backwash rate shall not be less than 15 gpm per square foot (611.21 L/m per m²) of filter area.~~

~~4. The filter bed shall not show any signs of migration or vary more than 1 inch (25 mm) on the surface after 15 minutes of backwashing followed, by 15 minutes of filtration.~~

DRAFT

~~**Note:** See Section 3128B for other requirements.~~

The backwash rate for a high rate sand filter shall be a minimum of 15 gpm per square foot of filter area.

NOTE: Authority cited: Section 131200 Health and Safety Code. Reference: Sections 116043 and 116050, Health and Safety Code.

DRAFT

32) Amend Section 3132B as follows:

SECTION 3132B

~~CHEMICAL FEEDERS~~ CARTRIDGE FILTERS.

In addition to the requirements for all filters as indicated in Section 3128B, the following apply to cartridge filters.

~~All chemical feeders, including disinfection feeders, and the auxiliary components shall comply with all of the provisions of this section.~~

~~**Note:** Chemical feeders include those used for solutions, slurries or solids and also include auxiliary parts such as pumps, strainers, tubing connections, tanks, injection fittings and other required components.~~

3132B.1 ~~**General design requirements.** Chemical feeder equipment shall comply with all of the following:~~

~~1. Equipment shall be capable of being easily disassembled for cleaning and repair.~~

~~2. Equipment shall be constructed of corrosion-resistant materials.~~

~~3. Equipment shall be constructed to permit repeated adjustments without loss of output rate accuracy if equipped with an adjustable output rate device.~~

~~4. Equipment shall be constructed to minimize a stoppage from chemicals intended to be used therein or from foreign materials that may be contained in said chemicals.~~

The filtration rate shall not exceed 0.375 gpm per square foot of filter area.

3132B.2 ~~**Piping.** Piping used for the chemical feeder and its auxiliary equipment shall be resistant to the chemical and erosion action of the chemicals intended to be used therein and shall be installed to permit cleaning or otherwise to prevent clogging of the parts with chemicals.~~ An approved wash down area equipped with potable water shall

DRAFT

be provided in the pool equipment area with permanently installed drainage piping discharging to the public sewer or wastewater system approved by the enforcing wastewater agency. The filter vessel shall be capable of being drained and shall be equipped with an indirect drain for the purpose of draining the entire contents of the filter vessel. Drainage and backwash piping shall be considered indirect waste and installed in accordance with the requirements of Chapter 8 of the California Plumbing Code.

3132B.3 ~~**Installation.** The feeder and its auxiliary equipment shall be constructed and installed to prevent uncontrolled discharge or siphonage of chemicals and fumes directly into the pool, its recirculating system or the pool area.~~ An additional set of filter elements shall be available for installation while the existing filter elements are cleaned.

NOTE: Authority cited: Section 131200 Health and Safety Code. Reference: Sections 116043 and 116050, Health and Safety Code.

DRAFT

33) Amend Section 3133B as follows:

SECTION 3133B

~~DISINFECTANT FEEDERS~~ CHEMICAL FEEDERS

~~Disinfectant feeders shall comply with the provisions contained in this section in addition to the provisions contained in Section 3132B.~~ All chemical feeders including disinfectant feeders and the auxiliary feeders used for solutions, slurries or solids, along with components such as pumps, strainers, tubing connections, tanks and injection fittings shall comply with the provisions of this section.

3133B.1 ~~Minimum capacity~~. General design requirements. ~~The disinfectant feeder shall be capable of supplying not less than the equivalent of 3 pounds (1kg) of chlorine per day (PPD) per 10,000 gallons (37,850 L) of pool water capacity.~~

~~**Exception:** A feeder of lesser capacity shall be permitted when it can be demonstrated to the enforcing agency that the lesser capacity feeder can comply with the disinfection requirements of Section 65529, Title 22, Chapter 20, California Code of Regulations.~~

The chemical feeder equipment shall:

1. Be maintained and repaired according to manufacturers' specifications;
2. Be constructed with an adjustable output rate device to permit repeated adjustments without loss of output rate accuracy or adjusted by an automatic chemical monitoring and control system; and
3. Meet the applicable requirements established by the NSF/ANSI 50-2010 performance standard effective August 2010.

DRAFT

3133B.2 ~~Rate of Flow Adjustment.~~ Piping. ~~Each feeder shall have a graduated and clearly marked rate of flow adjustment feature capable of providing disinfectant flows from 25 percent to 100 percent of rated capacity. The graduated markings shall be accurate within 10 percent of the flow rate at any setting~~. Piping used for the chemical feeder and its auxiliary equipment shall be resistant to corrosion or chemical deterioration.

3133B.3 ~~Compressed chlorine gas disinfectant equipment.~~ Installation. ~~Compressed chlorine gas disinfectant equipment shall comply with the provisions contained in this section in addition to the provisions contained in Sections 3133B.1 and 3133B.2.~~

~~**Note:** See Section 3122B for special construction requirements of a room containing compressed chlorine gas disinfectant equipment.~~

~~**3133.3.1 Chlorine containers.** Each chlorine gas container or cylinder shall be firmly secured to prevent accidental movement. A precaution cap shall be provided in place at all times when the cylinder is not connected to the chlorinator.~~

~~**3133.3.2 Container scale.** A means of weighing chlorine containers shall be provided in the gas chlorinator room.~~

~~**3133B.3.3 Chlorine feeding device.** In addition to the requirements contained in Section 3133B.1, the chlorine feeding device shall be capable of delivering chlorine in aqueous solution at maximum design rate. The device shall not allow the backflow of water into the chlorine solution container. The device shall not allow the release of chlorine gas to the atmosphere under normal operating conditions. The devices shall~~

DRAFT

~~be designed and installed to conduct chlorine gas leaks to the outdoors during an accident or an interruption of the water supply.~~

~~**3133B.3.4 Piping.** Piping carrying chlorine gas under pressure shall not be located outside the chlorination equipment room.~~

Chemical feeders and associated components shall be constructed and installed to prevent uncontrolled discharge or siphoning of chemicals and fumes directly into the pool, its recirculation system, the pool area or ancillary facilities.

NOTE: Authority cited: Section 131200 Health and Safety Code. Reference: Sections 116043 and 116050, Health and Safety Code.

DRAFT

34) Amend Section 3134B as follows:

SECTION 3134B

~~POOL FITTINGS~~ DISINFECTANT FEEDERS

~~The pool shall be equipped with one or more skimming methods which, when combined, shall be capable of continually withdrawing not less than 75 percent of the required circulation capacity, to provide continuous skimming of the water surface and to provide an overflow drainage system.~~ Disinfectant feeders shall comply with applicable requirements established by the NSF/ANSI 50-2010 performance standard effective August 2010 for disinfectant feeders. In addition to the requirements for chemical feeders as indicated in Section 3133B, the following apply to disinfectant feeders.

3134B.1 ~~Surface skimmers.~~ Minimum Capacity. ~~Each surface skimmer shall comply with all of the following provisions:~~

1. ~~The skimmer shall be of the built-in type, recessed into the pool wall.~~
2. ~~Each skimmer shall be individually adjustable for the rate of flow with either an external or internal device.~~
3. ~~The skimmer weir shall automatically adjust to variations in the pool water level over a range of not less than 4 inches (102 mm).~~
4. ~~The skimmer shall be provided with an air-lock protective device which shall not permit leakage of air into the recirculation suction piping system. This device shall not leak more than 3 gpm (11.356 L/m) of water during normal operations.~~
5. ~~Each skimmer shall be provided with a removable and cleanable screen or basket to trap large solids.~~

DRAFT

~~6. There shall not be less than one skimmer for each 500 square feet (46.45 m²) of pool water surface area, or fractional part thereof.~~

~~7. The skimmer shall be constructed with suitable materials and methods to withstand anticipated use conditions.~~

~~8. Each skimmer shall be located in relation to pool inlets to aid recirculation and skimming.~~

~~**Exception:** Skimmers shall not be used as the required overflow devices on a pool with a water surface area over 5,000 square feet (464.52 m²).~~

All feeders shall be capable of supplying not less than the equivalent of 3 pounds (1 kg) of 100% available chlorine per day per 10,000 gallons (37,850 L) of pool water capacity.

3134B.2 ~~**Perimeter overflow systems.**~~ **Rate of flow adjustment.** ~~A perimeter overflow system shall comply with all of the following provisions:~~

~~1. **Location.** The overflow system shall be built into the walls and extend completely around the pool except where steps require interruption.~~

~~2. **Channel detail.** The overflow channel shall not be less than 3 inches (76 mm) deep, the section shall not diverge with depth and the width of the bottom shall not be less than 3 inches (76 mm). The opening beneath the coping into the overflow system shall be a minimum of 4 inches (102 mm) beneath of the coping in any direction measured radially from the inner edge of the overflow channel lip.~~

~~3. **Channel lip.** The overflow channel lip shall not be more than 12 inches (305 mm) below the level of the deck. The lip edge shall be rounded and shall not be thicker than 2½ inches (64 mm) or thinner then 1 inch (25 mm) from for the top 2 inches (51 mm).~~

DRAFT

4. **Channel covering.** Covered overflow channels shall be permitted, providing bathers cannot enter it or get their arms or legs caught in the cover.

5. **Channel outlets.** Overflow channel outlets shall not be less than 2½ inches (64 mm) in diameter spaced not more than 15 feet (4572 mm) apart and the channel bottom slope to the drain shall be not less than ¼ inch (6.4 mm) per foot.

   Exception: Other drain spacing or channel bottom slope shall be permitted if hydraulically designed in accordance with acceptable engineering principles.

6. **Channel outlet covers.** Overflow channel outlets shall be provided with a clear opening area in the grating not less than 1.5 times the cross-sectional area of the outlet required in Section 3134B.

7. **Overflow drain piping.** Overflow drain piping shall provide drainage of the overflow system, shall carry overflow water to a surge storage chamber and shall establish hydraulic equilibrium in the pool and return to skimming within 10 minutes after being flooded by a sudden large use of the pool by bathers.

8. **Surge storage capacity.** A perimeter overflow system shall be provided with a minimum surge storage of not less than 1 gallon per square foot (40.75 L/m²) of pool water surface area. Surge storage shall be permitted in the perimeter overflow channel, the overflow water drain piping returning to the surge chamber and in the surge chamber.

9. **Surge flow control.** Automatic makeup (fresh) water-flow controls with a manual override provision shall be provided to maintain the proper operating pool water level

DRAFT

A visible means of determining the rate of flow through the device shall be provided for each disinfectant feeder.

3134B.3 ~~**Outlets.**~~ **Compressed chlorine gas disinfectant equipment.** ~~Each pool shall be provided with a bottom drain and outlets through which circulation shall take place and by which the pool can be emptied. The bottom drain and recirculation outlets shall be covered with grates or other protective devices which shall be removable only with tools. Slots or openings in grates or covers shall not exceed ½ inch (12.7 mm) in the smaller dimension and shall be of such area, shape and arrangement to prevent physical entrapment or a suction hazard to bathers.~~

~~**Exception:** Recirculation outlets for a spa pool shall be either a safety type which cannot be completely covered by any part of the body, or shall be installed in duplicate so as to prevent a suction hazard to bathers.~~

Chlorine gas shall not be dispensed directly into the water of a pool except as an aqueous solution through the return line of the recirculation system.

3134B.3.1 Compressed gas containers. Each container or cylinder shall be secured to prevent accidental movement. A valve protection cap shall be provided to cover the discharge valve at all times when the cylinder is not connected to the dispensing system.

3134B.3.2 Container scale. Compressed gas chlorine containers in use shall be on a scale in the gas chlorinator room.

3134B.3.3 Chlorine feeding device. The chlorine feeding device shall be capable of delivering chlorine in an aqueous solution at the maximum design rate. The device shall not allow the backflow of pool water into the chlorine container. The device

DRAFT

shall not allow the release of chlorine gas to the atmosphere under normal operating conditions. The device shall be designed and installed to conduct chlorine gas leaks to the outdoors during a release of chlorine gas or an interruption of the water supply.

3134B.3.4 Piping. Piping carrying chlorine gas under pressure shall not be located outside the gas chlorination equipment room.

~~**3134B.4 Hydrostatic devices**. In areas of anticipated high groundwater table, an approvered hydrostatic relief device shall be installed.~~

~~**3134B.5 Inlet Fittings.** Each pool shall be provided with not less than two recirculation inlets for the first 10,000-gallon (37,850 L) capacity and one additional inlet for each additional 10,000-gallon (37,850 L) capacity, or fractional part thereof.~~

~~**Exception**: A spa pool shall be provided with not less than one inlet.~~

~~**3134B.5.1 Construction.** Inlet fittings shall not protrude greater than 1¼ inches (32 mm) into the pool and shall be shaped, rounded and smooth.~~

~~**3134B.5.2** Inlet fittings shall be located greater than 18 inches (457 mm) below the waterline, except for the spa pool or wading pool. One floor inlet shall be provided for each 10,000 gallons (37,850 L) of pool capacity for a pool which exceeds 40 feet (12,192 mm) in width. Inlet fittings shall be separated by at least 10 feet (3048 mm) and shall be located to ensure uniform circulation.~~

~~**3134B.5.3 Adjustment.** Provisions shall be made for adjusting the volume of flow through each inlet. Wall inlets shall be capable of adjusting the direction of flow and to produce sufficient velocity to impart a substantial circulatory movement to the pool water.~~

DRAFT

NOTE: Authority cited: Section 131200 Health and Safety Code. Reference: Sections 116043 and 116050, Health and Safety Code.

DRAFT

35) Amend Section 3135B as follows:

SECTION 3135B

~~SPA POOL SPECIAL REQUIREMENTS~~

GAS CHLORINATION EQUIPMENT ROOM

Compressed chlorine gas storage containers and auxiliary components shall be installed indoors in a separate room of not less than 1-hour fire resistant construction and shall comply with the California Fire Code and all of the following.

3135B.1 ~~**Aeration system.**~~ **Location.** ~~A spa pool aeration and/or jet system shall be completely separate from its filtration system and shall not be interconnected with any non-spa pool.~~ The gas chlorination equipment room shall not be located in any habitable building, above the first floor or below ground level.

3135B.2 ~~**Maximum operating temperature.**~~ **Exit.** ~~The maximum allowable water temperature shall be 104°F (57.8°C) for a spa pool.~~ Required exit doors shall swing in the direction of exit of travel and shall not open directly toward the pool or pool deck.

3135B.3 Ventilation. Mechanical exhaust ventilation systems shall be in compliance with the California Mechanical Code.

3135B.4 Alarm. An audible and visible chlorine detection alarm system shall be located in the room containing the gas chlorine equipment. The sensor shall be located within 6 inches (152 mm) of the floor level. The system shall continually monitor the room and shall activate when chlorine concentrations in the room exceed a Permissible Exposure Limit of 0.5 ppm. Activation of the alarm shall shut off the chlorine at the source and turn on the lights and ventilation system. The alarm system shall consist of the following:

DRAFT

1. An audible alarm capable of producing a sound level of at least 90 decibels; and
2. A visible alarm consisting of a strobe light which is mounted directly over the entrance to the chlorine equipment room. The light shall be visible during daylight hours.

3135B.5 Illumination. Artificial illumination of at least 50 footcandles as measured 30 inches (750 mm) from the floor shall be provided in the room.

3135B.6 Switches. Switches for the control of ~~artificial lighting and~~ mechanical ventilation and lighting fixtures shall be located adjacent to the entry door outside the room ~~adjacent to the entry door~~.

3135B.7 Equipment interlocks. The gas chlorine feeding device shall be interlocked with the pool recirculating pump so that the gas chlorine feeding device shall not operate when the recirculating pump is off or during the filter backwash.

3135B.~~7~~8 Storage. The gas chlorine room shall not be used for the storage of items not related to the use of the gas chlorine equipment.

NOTE: Authority cited: Section 131200 Health and Safety Code. Reference: Sections 116043 and 116050, Health and Safety Code.

DRAFT

36) Amend Section 3136B as follows:

SECTION 3136B

~~CLEANING SYSTEMS~~

POOL SKIMMING SYSTEMS

~~A built-in or portable-type vacuum cleaning system shall be provided which is capable of removing sediment from all parts of the pool floor. When jet-type units are used, they shall be provided with approved-type backflow protection for the water system.~~ The pool shall be equipped with one or more skimming methods to provide continuous skimming of the pool water and shall be capable of continually withdrawing not less than 75 percent of the required flow rate.

3136B.1 Surface skimmers. Each surface skimmer shall comply with the following provisions:

1. The skimmer shall be recessed into the pool wall; and
2. The skimmer shall be individually adjustable for the rate of flow with either an external or internal device; and
3. Pools constructed after January 1, 2013, shall have skimmers with equalizer lines and all of the associated components plumbed directly to the main drain sump; and
4. A skimmer equalizer suction outlet located on the pool wall shall be connected to at least 2 suction grate assemblies that meet the ASME/ANSI A112.19.8 performance standard and located at least 3 feet (915 mm) apart in any dimension between the drains; and

DRAFT

5. The skimmer weir shall automatically adjust to variations in the pool water level over a range of not less than 4 inches (102 mm); and

6. The skimmer shall be provided with an air lock protective device which shall not permit leakage of air into the recirculation suction piping system. This device shall not leak more than 3 gpm (11.356 L/m) of water during normal operations; and

7. Each skimmer shall be provided with a removable and cleanable screen or basket to trap objects. The screen or basket shall be accessible through an opening in the deck above the skimmer; and

8. There shall be a minimum of one skimmer for every 500 square feet or less of pool water surface area or an adequate number to meet 100% of pump flow at the manufacturer's maximum flow rating, whichever is greater; and

9. Each skimmer shall be located in relation to pool inlets to aid recirculation and surface skimming; and

10. All surface skimmers shall comply with applicable requirements established by the NSF/ANSI 50-2010 performance standard effective August 2010.

3136B.2 Perimeter overflow systems. A perimeter overflow system shall be required in pools whose water surface area equals or exceeds 5,000 square feet (464.52 m²).~~3,000 square feet (278.7 m²)~~. Perimeter overflow systems shall be designed by an engineer or architect as defined by this Chapter who has experience working on public pools and shall comply with the following provisions:

1. **Location.** The overflow system shall be integrated with the pool structure and extend completely around the pool parallel to the pool deck except where an entry or exit may require interruption;

2. **Channel detail.** The overflow channel shall be not less than 3 inches (76 mm) deep, the section shall not diverge with depth of the channel, and the width of the bottom shall be not less than 3 inches (76 mm). The opening beneath the coping into the overflow system shall be a minimum of 4 inches (102 mm) beneath the coping in any direction measured radially from the inner edge of the overflow channel lip;

3. **Channel lip.** The overflow channel lip shall be not more than 12 inches (305 mm) below the level of the coping or deck. The lip edge shall be rounded and shall be not thicker than 2½ inches (64 mm) or thinner than 1 inch (25 mm) for the top 2 inches (51 mm);

4. **Channel covering.** Covered overflow channels shall be permitted provided the openings do not exceed ½ inch in the smaller dimension;

5. **Channel outlets.** Channel outlet spacing and channel bottom slope shall be hydraulically designed by an engineer or architect as defined by this Chapter who has experience working on public pools;

6. **Channel outlet covers.** Overflow channel outlet covers shall be accessible for cleaning and maintenance. Openings of the channel outlet covers shall not pass a ½ inch (13 mm) sphere in the smaller dimension;

7. **Channel drain piping.** Channel drain piping shall provide drainage of the overflow system, carry overflow water to a surge basin and return to skimming within 10 minutes after being flooded by a sudden displacement of the pool water by pool users;

DRAFT

8. **Surge storage capacity.** A perimeter overflow system shall be provided with a minimum surge storage capacity of not less than 1 gallon per square foot (40.75 L/m²) of pool water surface area. Surge storage shall be permitted in the surge basin, perimeter overflow channel and in the channel drain piping returning to the surge basin; and

9. **Water level control.** Automatic makeup water flow controls with a manual override control shall be provided to maintain the proper pool water level at the overflow rim.

NOTE: Authority cited: Section 131200 Health and Safety Code. Reference: Sections 116043 and 116050, Health and Safety Code.

DRAFT

37) Amend Section 3137B as follows:

SECTION 3137B

~~WASTE WATER DISPOSAL~~ POOL FITTINGS

3137B.1 ~~General requirements.~~ Outlets. ~~Material cleaned from filters, waste water from temporary training pool showers and backwash water from any pool system shall be disposed of in a manner which will not create a (public) nuisance.~~

~~**3137B.1.1 Sand filters.** In accordance with applicable local regulations, the backwash water from a sand filter shall be disposed of to a storm drain or sewer system, dry well, or, when approved, such water many be disposed of by surface or subsurface irrigation.~~

~~**3137B.1.2 Diatomaceous earth filters.** The backwash waste water from a diatomaceous earth filter shall discharge into a receiving chamber installed to collect the waste diatomaceous earth mixture, or, when approved, such waste shall be permitted to be disposed of by other means such as to a sanitary sewer.~~

~~**3137B.1.3 Piping.** Sumps and drain piping shall have sufficient capacity to receive pool system backwash without overflow of the sump receiver. **3137B.1.4 Visual indicator.** A sight glass shall be installed on the waste water discharge line from a filter.~~

~~**Exception:** The sight glass shall not be required when an air-gap connection from the filter vessel to a sewer or other drainage system is clearly visible to the operator during actual backwash operation.~~

DRAFT

Each pool shall be provided with a main drain submerged suction outlet typically located at the bottom of a pool that conducts water to a recirculating pump. Suction outlets shall comply with all of the following provisions:

1. Each pump on a pool system shall be connected to at least two suction outlets. The suction outlets shall be hydraulically balanced and symmetrically plumbed through one or more "T" fittings and shall be separated by a distance of at least 3 feet (915 mm) apart in any dimension between the suction outlets;
2. All suction outlets shall be equipped with suction fittings that meet the ASME/ANSI A112.19.8 performance standard;
3. The velocity of the suction piping installed between the suction outlets shall not exceed 3 feet per second (1.8 mps); and
4. **Hydrostatic Relief Devices**. In areas with a high groundwater table, or as required by local plumbing codes, a hydrostatic relief device shall be installed. When used in conjunction with a SVRS, the hydrostatic relief device must meet the manufacturer's installation requirements for the SVRS.

3137B.2 ~~Prohibited Connection.~~ Inlet Fittings. ~~No direct connection of the pool or its recirculation system shall be permitted with a sanitary sewer, storm drain or drainage system. When permitted by local regulations, discharge to a sanitary sewer shall be through an air-gap-type separation~~. Each pool shall be provided with not less than two recirculation system inlets for the first 10,000 gallon (37,850 L) capacity and one additional inlet for each additional 10,000 gallon (37,850 L) or less capacity.

3137B.2.1 Construction. Inlet fittings shall not protrude greater than 1¼ inches (32 mm) into the pool and shall be shaped, rounded and smooth.

DRAFT

3137B.2.2 Location. Inlet fittings shall be located no less than 18 inches (457 mm) below the waterline, except for a spa pool or wading pool. Inlet fittings shall be separated by at least 10 feet (3048 mm) and shall be located so as to ensure uniform circulation.

3137B.2.3 Adjustment. Provisions shall be made for adjusting the volume of flow through each inlet. Wall inlets shall be capable of adjusting the direction of flow and to produce sufficient velocity to impart a substantial circulatory movement to the pool water.

3137B.2.4 Floor Inlets. Pools that are greater than 40 feet (12,192 mm) in width or 3,000 square feet (278.7 mm^2) in surface area shall have floor-mounted return inlets. The number of floor inlets shall be in compliance with Section 3137B.2. All floor inlet fittings shall be located to provide uniform circulation and shall be installed so as to be flush with the surface of the pool bottom.

NOTE: Authority cited: Section 131200 Health and Safety Code. Reference: Sections 116043 and 116050, Health and Safety Code.

DRAFT

38) Amend Section 3138B as follows:

SECTION 3138B

~~Reserved~~ SPA POOL SPECIAL REQUIREMENTS

3138B.1 Aeration system. A spa pool aeration and/or jet system shall be completely separate from the recirculation system and shall not be interconnected with any other pool.

3138B.2 Maximum operating temperature. The allowable water temperature of a spa pool shall not exceed 104° F (57.8° C).

3138B.3 Surface area. The water surface area of a spa pool shall not exceed 250 square feet (23.23 m^2).

3138B.4 Maximum depth. The water depth in a spa pool shall not exceed 4 feet (1220 mm).

3138B.5 Emergency shut off switch. A clearly labeled emergency shut off switch for the control of both the recirculation system and the aeration and/or jet system shall be installed adjacent to the spa pool.

NOTE: Authority cited: Section 131200 Health and Safety Code. Reference: Sections 116043 and 116050, Health and Safety Code.

DRAFT

39) Add Section 3139B as follows:

SECTION 3139B

~~Reserved~~ SOLAR HEATING INSTALLATIONS

3139B.1 Solar heating systems ~~shall not be interconnected with the pool recirculation system and~~ shall comply with the following:

1. Solar heating system suction outlets shall comply with Section 3137B; and
2. Solar heating system suction outlets shall be located no closer than 5 feet (1525 mm) to any pool inlet fitting.
3. The installation of a solar heating system on a~~n~~ new or existing pool shall not interfere with the required turnover rate as specified in Section 3124B nor exceed the pipe flow velocities as specified in Section 3125B.1.

NOTE: Authority cited: Section 131200 Health and Safety Code. Reference: Sections 116043 and 116050, Health and Safety Code.

DRAFT

40) Add Section 3140B as follows:

Section 3140B

~~Reserved~~ CLEANING SYSTEMS

A vacuum cleaning system shall be available which is capable of removing sediment from all parts of the pool floor. A cleaning system using potable water shall be provided with an approved backflow protection device as required by the California Department of Public Health under Sections 7601 to 7605, Article 2, Title 17, California Code of Regulations. No cleaning system shall operate in the pool when the pool is open or available for use by pool users. Built-in vacuum suction lines shall not be installed in the pool.

NOTE: Authority cited: Section 131200 Health and Safety Code. Reference: Sections 116043 and 116050, Health and Safety Code.

DRAFT

41) Add Section 3141B as follows:

SECTION 3141B

~~Reserved~~ WASTEWATER DISPOSAL.

3141B.1 General requirements. Material cleaned from filters and backwash water from any recirculation system shall be disposed in a manner that is acceptable to the local wastewater agency and will not create a nuisance. Backwash water shall not be returned to a pool. Pipes carrying wastewater from pools including pool drainage and backwash from filters shall be installed as an indirect waste in accordance with the requirements of Chapter 8 of the California Plumbing Code. Where a pump is used to discharge waste pool water to the drainage system, the pump discharge shall be installed as an indirect waste.

3141B.2 Diatomaceous earth filters. The backwash from a diatomaceous earth filter shall discharge into a separation tank that has been installed to collect the waste diatomaceous earth mixture. The wastewater from the separation tank shall discharge into a sanitary sewer or other disposal system acceptable to the local wastewater agency.

3141B.3 Piping. Sumps and drain piping shall have sufficient capacity to receive recirculation system backwash without overflow of the sump receiver. The sump shall not permit sewage to enter the surge basin or the pool in the event of a sewage backup

3141B.4 Visual indicator. Where direct observation of the backwash discharge is not visible to the operator during backwash operations, a sight glass shall be installed on the wastewater discharge line.

DRAFT

3141B.5 Prohibited connection. There shall be no direct connection between the pool, its recirculation system or overflow drain to any sanitary sewer, storm drain or drainage system.

NOTE: Authority cited: Section 131200 Health and Safety Code. Reference: Sections 116043 and 116050, Health and Safety Code.

DRAFT

SECTION 3142B

Reserved

SECTION 3143B

Reserved

SECTION 3144B

Reserved

SECTION 3145B

Reserved

SECTION 3146B

Reserved

SECTION 3147B

Reserved

SECTION 3148B

Reserved

SECTION 3149B

DRAFT

Reserved

SECTION 3150B

Reserved

SECTION 3151B

Reserved

SECTION 3152B

Reserved

SECTION 3153B

Reserved

SECTION 3154B

Reserved

SECTION 3155B

Reserved

SECTION 3156B

Reserved

DRAFT

SECTION 3157B

Reserved

SECTION 3158B

Reserved

SECTION 3159B

Reserved

DRAFT

Division II – PUBLIC SWIMMING POOLS

Note: These building standards are in statute but have not been adopted through the regulatory process. Enforcement of these standards set forth in this section does not depend upon adoption of regulations; therefore, enforcement agencies shall enforce the standards pursuant to the timeline set forth in this section prior to adoption of related regulations.

SECTION 3160B

GROUND FAULT CIRCUIT INTERRUPTERS

1. "Public swimming pool," as used in this section, means any swimming pool operated for the use of the general public with or without charge, or for the use of the members and guests of a private club, including any swimming pool located on the

grounds of a hotel, motel, inn, an apartment complex or any residential setting other than a single-family home. For purposed of this section, "public swimming pool" shall not include a swimming pool located on the grounds of a private single-family home, or a swimming pool owned or operated by the state or any local governmental entity as set forth in Section 116049 of the Health and Safety Code.

2. All dry-niche light fixtures, and all underwater wet-niche light fixtures operating at more than 15 volts in public swimming pools, as defined in this section, shall be protected by a ground fault circuit interrupter in the branch circuit, and all light fixtures in public swimming pools shall have encapsulated terminals.
3. Any public swimming pool that does not meet the requirements specified in Item 2 by January 1, 1998, shall be retrofitted to comply with these requirements by July 1, 1998.
4. The ground-fault circuit interrupter required pursuant to this section shall comply with Underwriter's Laboratory standards.
5. The owner or operator of a public swimming pool shall have its public swimming pool inspected by a qualified inspector on or before September 1, 1998, to determine compliance with this section.
6. All electrical work required for compliance with this section shall be performed by an electrician licensed pursuant to Chapter 9 (commencing with Section 7000) of Division 3 of the Business and Professions Code.

DRAFT

SECTION 3161B

WADING POOLS

1. "Public wading pool" means a pool that meets all of the following criteria:

   1.1 It has a maximum water depth not exceeding 18 inches (457 mm).

   1.2 It is a pool other than a pool that is located on the premises of a one-unit or two-unit residence, intended solely or the use of the residents or guests.

2. "Public wading pool" includes, but is not limited to, a pool owned or operated by private persons or agencies, or by state or local governmental agencies.

3. "Public wading pool" includes, but is not limited to, a pool located in an apartment house, hotel or similar setting that is intended for the use of residents or guests.

4. "Alteration" means any of the following:

   4.1 To change, modify or rearrange the structural parts or the design.

   4.2 To enlarge.

   4.3 To move the location of.

   4.4. To install a new water circulation system.

   4.5. To make any repairs costing fifty dollars ($50) or more to an exixting circulation system.

5. A public wading pool shall have at least two circulation drains per pump that are hydraulically balanced and symmetrically plumbed through one or more T fittings, and are separated by a distance of at least 3 feet (914 mm) in any dimension between drains.

DRAFT

6. All public wading pool main drain suction outlets that are under 12 inches (305 mm) across shall be covered with antivortex grates or similar protective devices. All main drain suction outlets shall be covered with grates or antivortex plates that cannot be removed except with the use of tools. Slots or openings in the grates or similar protective devices shall be of a shape, area and arrangement that would prevent physical entrapment and would not pose any suction hazard to bathers.
7. The maximum velocity in the pump suction hydraulic system shall not exceed 6 feet per second (1.8 m/s) when 100 percent of the pump's flow comes from the main drain system and any main drain suction fitting in the system is completely blocked.
8. On or after January 1, 1998, all newly constructed public wading pools shall be constructed in compliance with this section.
9. Commencing January 1, 1998, whenever a construction permit is issued for alteration of an existing public wading pool, it shall be retrofitted so as to be in compliance with this section.
10. By January 1, 2000, every public wading pool, regardless of the date of original construction, shall be retrofitted to comply with this section.

[SB, Statutes of 1997, C.913]

DRAFT

SECTION 3162
ANTI-ENTRAPMENT DEVICES AND SYSTEMS

1. The Legislature finds and declares that the public health interest requires that there be uniform statewide health and safety standards for public swimming pools to prevent physical entrapment and serious injury to children and adults. It is the intent of the Legislature to occupy the whole field of health and safety standards for public swimming pools and the requirements established in this article and the regulations adopted pursuant to this article shall be exclusive of all local health and safety standards relating to public swimming pools.

2. As used in this section, the following words have the following meanings:

   (a) "ASME/ANSI performance standard" means a standard that is accredited by the American National Standards Institute and published by the American Society of Mechanical Engineers.

   (b) "ASTM performance standard" means a standard that is developed and published by ASTM International.

   (c) "Main drain" means a submerged suction outlet typically located at the bottom of a swimming pool that conducts water to a recirculating pump.

DRAFT

(d) “Public swimming pool” means an outdoor or indoor structure, whether in-ground or above-ground, intended for swimming or recreational bathing, including a swimming pool, hot tub, spa, or nonportable wading pool, that is any of the following:

(i) Open to the public generally, whether for a fee or free of charge.

(ii) Open exclusively to members of an organization and their guests, residents of a multiunit apartment building, apartment complex, residential real estate development, or other multifamily residential area, or patrons of a hotel or other public accommodations facility.

(iii) Located on the premises of an athletic club, or public or private school.

(e) “Qualified individual” means a contractor who holds a current valid license issued by the State of California or a professional engineer licensed in the State of California who has experience working on public swimming pools.

(f) “Safety vacuum release system” means a vacuum release system that ceases operation of the pump, reverses the circulation flow, or otherwise provides a vacuum release at a suction outlet when a blockage is detected.

DRAFT

(g) “Skimmer equalizer line” means a suction outlet located below the waterline and connected to the body of a skimmer that prevents air from being drawn into the pump if the water level drops below the skimmer weir. However, a skimmer equalizer line is not a main drain.

(h) “Unblockable drain” means a drain of any size and shape that a human body cannot sufficiently block to create a suction entrapment hazard.

3. Subject to Subdivision (4), an ASME/ANSI or ASTM performance standard relating to anti-entrapment devices or systems or an amendment or successor to, or later published edition of an ASME/ANSI or ASTM performance standard relating to anti-entrapment devices or systems shall become the applicable standard in California 90 days after publication by ASME/ANSI or ASTM, respectively, provided that the performance standard or amendment or successor to, or later published edition is approved by the department within 90 days of the publication of the performance standard by ASME/ANSI or ASTM, respectively. Notwithstanding any other law, the department may implement, interpret, or make specific the provisions of this section by means of a policy letter or similar instruction and this action by the department shall not be subject to the rulemaking requirements of the Administrative Procedure Act (Chapter 3.5 (commencing with Section 11340) of Part 1 of Division 3 of Title 2 of the Government Code).

DRAFT

4. Subject to Subdivision (7), every public swimming pool shall be equipped with anti-entrapment devices or systems that comply with ASME/ANSI performance standard A112.19.8, as in effect December 31, 2009, or any applicable ASME/ANSI performance standard that has been adopted by the department pursuant to Subdivision (3).

5. Subject to Subdivisions (6) and (7), every public swimming pool with a single main drain that is not an unblockable drain shall be equipped with at least one or more of the following devices or systems that are designed to prevent physical entrapment by pool drains:

   (a) A safety vacuum release system that has been tested by a department-approved independent third party and found to conform to ASME/ANSI performance standard A112.19.17, as in effect on December 31, 2009, or any applicable ASME/ANSI performance standard that has been adopted by the department pursuant to Subdivision (3), or ASTM performance standard F2387, as in effect on December 31, 2009, or any applicable ASTM performance standard that has been adopted by the department pursuant to Subdivision (3).

   (b) A suction-limiting vent system with a tamper-resistant atmospheric opening, provided that it conforms to any applicable ASME/ANSI or ASTM performance standard that has been adopted by the department pursuant to Subdivision (3).

DRAFT

(c) A gravity drainage system that utilizes a collector tank, provided that it conforms to any applicable ASME/ANSI or ASTM performance standard that has been adopted by the department pursuant to Subdivision (3).

(d) An automatic pump shut-off system tested by a department-approved independent third party and found to conform to any applicable ASME/ANSI or ASTM performance standard that has been adopted by the department pursuant to Subdivision (3).

(e) Any other system that is deemed, in accordance with federal law, to be equally effective as, or more effective than, the systems described in paragraphs (a) to (d), inclusive, at preventing or eliminating the risk of injury or death associated with pool drainage systems.

6. Every public swimming pool constructed on or after January 1, 2010, shall have at least two main drains per pump that are hydraulically balanced and symmetrically plumbed through one or more “T” fittings, and that are separated by a distance of at least three feet in any dimension between the drains. A public swimming pool constructed on or after January 1, 2010, that meets the requirements of this subdivision, shall be exempt from the requirements of Subdivision (5).

7. A public swimming pool constructed prior to January 1, 2010, shall be retrofitted to comply with Subdivisions (4) and (5) by no later than July 1, 2010, except that no

DRAFT

further retrofitting is required for a public swimming pool that completed a retrofit between December 19, 2007, and January 1, 2010, that complied with the Virginia Graeme Baker Pool and Spa Safety Act (15 U.S.C. Sec. 8001 et seq.) as in effect on the date of issue of the construction permit, or for a nonportable wading pool that completed a retrofit prior to January 1, 2010, that complied with state law on the date of issue of the construction permit. A public swimming pool owner who meets the exception described in this subdivision shall do one of the following prior to September 30, 2010:

a. File the form issued by the department pursuant to subdivision (g), as otherwise provided in subdivision (h).

b. File a signed statement attesting that the required work has been completed.

c. Provide a document containing the name and license number of the qualified individual who completed the required work.

d. Provide either a copy of the final building permit, if required by the local agency, or a copy of one of the following documents if no permit was required:

(i) A document that describes the modification in a manner that provides sufficient information to document the work that was done to comply with federal law.

DRAFT

(ii) A copy of the final paid invoice. The amount paid for the services may be omitted or redacted from the final invoice prior to submission.

8. Prior to March 31, 2010, the department shall issue a form for use by an owner of a public swimming pool to indicate compliance with this section. The department shall consult with county health officers and directors of departments of environmental health in developing the form and shall post the form on the department's Internet Web site. The form shall be completed by the owner of a public swimming pool prior to filing the form with the appropriate city, county, or city and county department of environmental health. The form shall include, but not be limited to, the following information:

a. A statement of whether the pool operates with a single or split main drain.

b. Identification of the type of anti-entrapment devices or systems that have been installed pursuant to Subdivision (4) and the date or dates of installation.

c. Identification of the type of devices or systems designed to prevent physical entrapment that have been installed pursuant to Subdivision (5) in a public swimming pool with a single main drain that is not an unblockable drain and the date or dates of installation or the reason why the requirement is not applicable.

DRAFT

d. A signature and license number of a qualified individual who certifies that the factual information provided on the form in response to paragraphs (a) to (c), inclusive, is true to the best of his or her knowledge.

9. A qualified individual who improperly certifies information pursuant to Paragraph (d) of Subdivision (8) shall be subject to potential disciplinary action at the discretion of the licensing authority.

10. Except as provided in Subdivision (7), each public swimming pool owner shall file a completed copy of the form issued by the department pursuant to this section with the city, county, or city and county department of environmental health in the city, county, or city and county in which the swimming pool is located. The form shall be filed within 30 days following the completion of the swimming pool construction or installation required pursuant to this section or, if the construction or installation is completed prior to the date that the department issues the form pursuant to this section, within 30 days of the date that the department issues the form. The public swimming pool owner or operator shall not make a false statement, representation, certification, record, report, or otherwise falsify information that he or she is required to file or maintain pursuant to this section.

11. In enforcing this section, health officers and directors of city, county, or city and county departments of environmental health shall consider documentation filed on or with the form issued pursuant to this section by the owner of a public swimming pool

Revised 9/12/11

DRAFT

as evidence of compliance with this section. A city, county, or city and county department of environmental health may verify the accuracy of the information filed on or with the form.

12. To the extent that the requirements for public wading pools imposed by Section 116064 conflict with this section, the requirements of this section shall prevail.

a. Until January 1, 2014, the department may assess an annual fee on the owners of each public swimming pool, to be collected by the applicable local health department, in an amount not to exceed the amount necessary to defray the department's costs of carrying out its duties under Section 116064.1 and this section but in no case shall this fee exceed six dollars ($6).

b. The local health department may retain a portion of the fee collected pursuant to paragraph (a) in an amount necessary to cover the administrative costs of collecting the fee, but in no case to exceed one dollar ($1).

c. The local health department shall bill the owner of each public swimming pool in its jurisdiction for the amount of the state fee. The local health department shall transmit the collected state fee to the Controller for deposit into the Recreational Health Fund, which is hereby created in the State Treasury. The local health department shall not be required to take action to collect an unpaid state fee, but shall submit to the department, every six months, a list containing the name and

Revised 9/12/11

DRAFT

address of the owner of each public swimming pool who has failed to pay the state fee for more than 90 days after the date that the bill was provided to the owner of the public swimming pool.

d. Owners that are exempt from local swimming pool permit fees shall also be exempt from the fees imposed pursuant to this subdivision.

e. Except as provided in paragraph (b), all moneys collected by the department pursuant to this section shall be deposited into the Recreational Health Fund. Notwithstanding Section 16305.7 of the Government Code, interest and dividends on moneys in the Recreational Health Fund shall also be deposited in the fund. Moneys in the fund shall, upon appropriation by the Legislature, be available to the department for carrying out its duties under Section 116064.1 and this section and shall not be redirected for any other purpose.

DRAFT

FIGURE 31B-1

DEPTHS AND CLEARANCES FOR POOLS WITH DIVING BOARDS ~~ABOVE~~ GREATER THAN 30 INCHES (762 mm) ABOVE THE WATER LINE

LONGITUDINAL SECTION

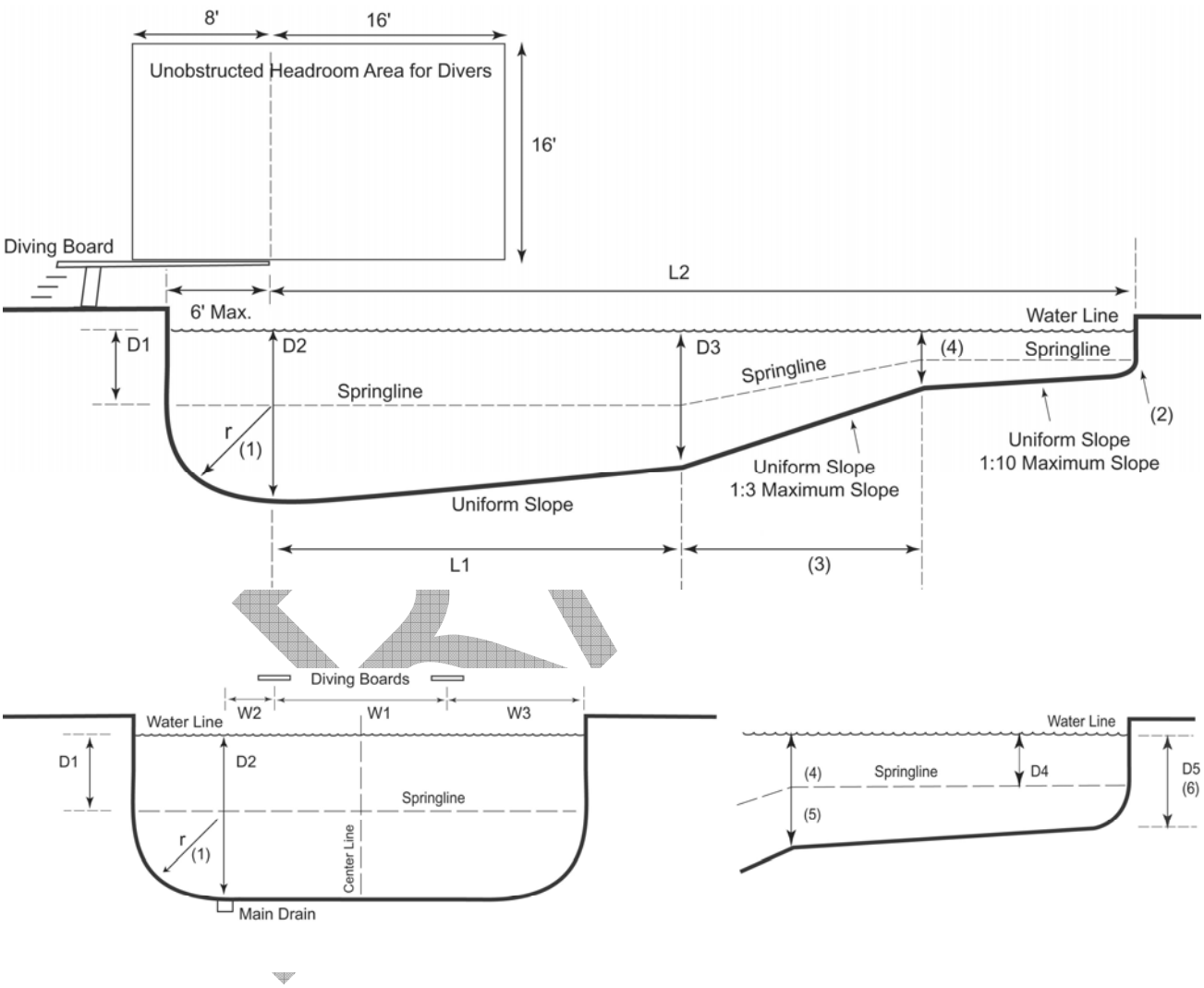

Transverse Section Deep End Through Main Drain **Traverse SectionShallow End**

~~TABLE 1~~

~~MINIMUM REQUIRED DEPTHS AND CLEARANCES~~

~~FOR 1-METER AND 3-METER BOARDS~~

		~~Depth of Water~~					~~Length of Section~~					
~~**Boards and Platforms**~~	~~**Dim.**~~	~~D-1~~	~~D-2~~	~~D-3~~	~~D-4~~	~~D-5~~	~~L-1~~	~~L-2~~	~~L-3~~	~~L-4~~	~~W-1~~	~~W-2~~
~~**1-Meter Board**~~	~~**Min.**~~	~~4' 0' (1.2m)~~	~~8' 6" (2.6m)~~	~~9' 0' (2.7m)~~	~~8' 6" (2.6m)~~	~~4' 6" (1.4m)~~	~~5' 0" (1.5m)~~	~~20' 0" (6.1m)~~	~~11' 4" (3.4m)~~	~~10' 0" (3.0m)~~	~~10' 0" (3.0m)~~	~~5' 0" (1.5m)~~
~~**3-Meter Board**~~	~~**Min.**~~	~~4' 0" (1.2m)~~	~~10' 0" (3.0m)~~	~~11' 6" (3.5m)~~	~~10' 6" (3.2m)~~	~~4' 6" (1.4m)~~	~~5' 0" (1.5m)~~	~~30' 0" (9.2m)~~	~~14' 0" (4.3m)~~	~~14' 0" (4.3m)~~	~~15' 0" (4.6m)~~	~~5' 0" (1.5m)~~

Table 31B-1

		Depth of Water					**Length of Section**				
Boards and Platforms	**Dim**	D1	D2	D3	D4	D5	L1	L2	W1	W2	W3
1-Meter Board	**Min**	6' 0'	12'0"	11' 0'	2' 6"	0' 0"	20' 0"	30' 0"	10' 0"	5' 0"	11' 0"
3-Meter Board	**Min**	7' 0"	13' 0"	12' 0"	2' 6"	0' 0"	20' 0"	40' 0"	10' 0"	5' 0"	12' 0")

Notes for Figure 31B-1 and Table 31B-1:

1. Maximum radius ~~at shallow end~~ shall ~~be 1'0"~~ equal D2 minus D1 dimensions.
2. ~~Springline (D-1) shall extend to the break in slope between the shallow area and the diving bowl.~~ Radius at the shallow end shall be not less than 6 inches nor more than 12 inches.
3. ~~See exception to Section 3108B.~~ The length of a section is based on the maximum slope and other maximum and minimum dimensions.
4. ~~Dimension based on maximum slope and other minimum or maximum dimensions.~~ Where there is a break in slope, the break shall be located at a water depth equal to 4'6".
5. The springline depth at (4) shall not be less than 2'6" nor more than 4'0".
6. The maximum water depth shall be 3'6".

DRAFT

FIGURE 31B-2

DEPTHS AND CLEARANCES FOR POOLS WITH DIVING BOARDS 30 INCHES (762 MM) OR LESS ABOVE THE WATER LINE.

LONGITUDINAL SECTION

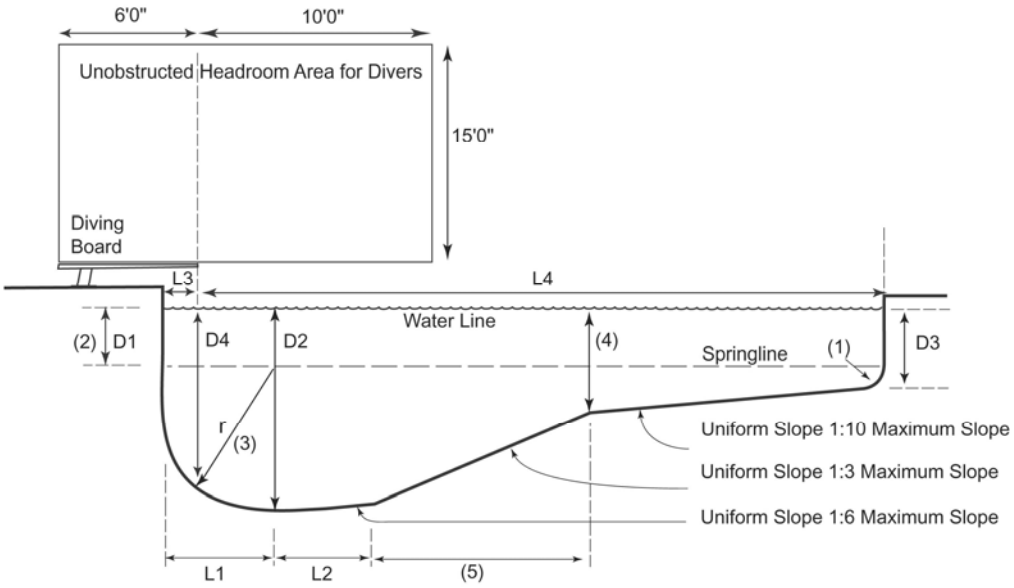

TRANSVERSE SECTION AT D2 ~~D-4~~

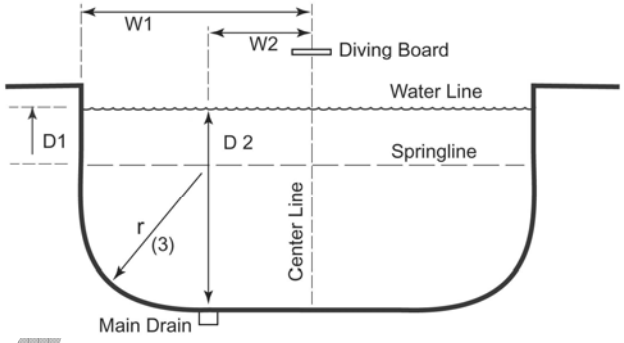

~~Table 2~~

~~Boards and Platforms~~	~~Dimension~~	~~Depth of Water~~						~~Length of Section~~					
		~~D-1~~	~~D-2~~	~~D-3~~	~~D-4~~	~~D-5~~	~~D-6~~	~~L1~~	~~L2~~	~~L3~~	~~L4~~	~~W1~~	~~W2~~
~~Deck Level Board~~	~~Minimum~~	~~5' 0" (1.5m)~~	~~2' 6" (0.8m)~~	~~7' 0" (2.1m)~~	~~8' 6" (2.6m)~~	~~8' 0" (2.4m)~~	~~4' 6" (1.4m)~~	~~2' 6" (0.8m)~~	~~20' 0" (6.1m)~~	~~6' 0" (1.8m)~~	~~6' 0" (1.8m)~~	~~9' 0" (2.7m)~~	~~3' 0" (0.9m)~~
	~~Maximum~~	—	—		—			~~4' 0" (1.2m)~~	—	~~10' 0" (3.0m)~~	—	—	—

Table 31B-2

	Depth of Water				**Length of Section**					
Dimension	D1	D2	D3	D4	L1	L2	L3	L4	W1	W2
Minimum	2’6”	8’6”	0’0”	7’0”	6’0”	6’0”	2’6”	30’0”	9’0”	3’0”)
Maximum	---	---	3’6”	---	10’0”	---	4’0”	---	---	---

Notes for Figure 31B-2 and Table 31B-2:

1. ~~Maximum r~~Radius at the shallow end shall be a minimum of 0’6” and a maximum of 1’0”.
2. Springline ~~(~~D1~~)~~ shall extend to the break in slope between the shallow area and the ~~diving bowl~~ deep area.
3. ~~See exception to Section 3108B.~~ Maximum radius shall equal D2 minus D1 dimensions.
4. ~~Dimension W-1 and W-2 shall apply from wall at deep end to D-6.~~ Where there is a break in slope, the break in slope shall be located at a water depth equal to 4’6”.
5. ~~Dimension~~ Length of section based on maximum slope and other ~~minimum or~~ maximum or minimum dimensions.

DRAFT

FIGURE 31B-3

DEPTHS AND CLEARANCES FOR POOLS WITHOUT DIVING BOARDS

LONGITUDINAL SECTION

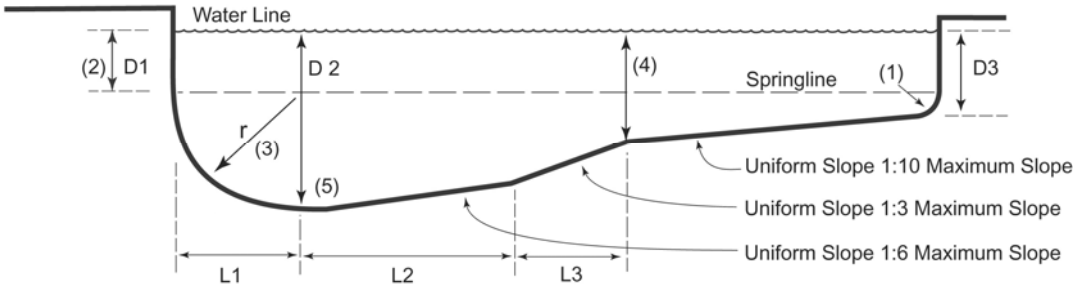

TRANSVERSE SECTION AT D2

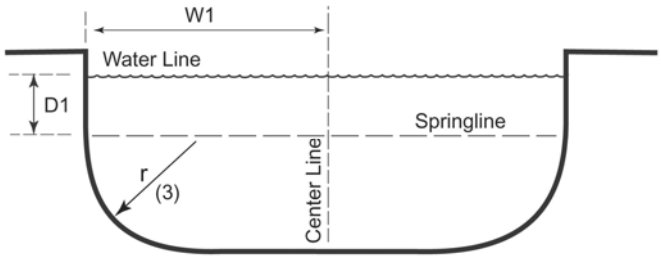

~~Table -3~~

~~Required Depths and Clearances for Pools without Diving Boards~~

~~Boards and Platforms~~		~~Depth of Water~~				~~Length of Section~~	
	~~Dimension~~	~~D-1~~	~~D-2~~	~~D-3~~	~~D-4~~	~~L-1~~	~~L-2~~
~~None~~	~~Minimum~~	~~2' 6" (0.8 m)~~	~~6' 0" (1.8 m)~~	~~5' 6" (1.7 m)~~	~~4' 6" (1.4 m)~~	~~3' 6" (1.1 m)~~	~~3' 0" (0.9 m)~~

Table 31B-3a

Pools with Maximum Water Depth ≤ 6’0”

	Depth of Water			**Length of Section**			
Dimension	D1	D2	D3	L1	L2	L3	W1
Minimum	2’6”	(5)	0’0”	3’6”	3’0”	3’0”	6’0”
Maximum	---	6’0”	3’6”	---	---	---	---

Table 31B-3b

Pools with Maximum Water Depth > 6’0”

	Depth of Water			**Length of Section**		
Dimension	D1	D2	D3	L1	L2	W1
Minimum	2’ 6”	(5)	0’0”	3’6”	3’0”	7’6”
Maximum	---	---	3’6”	---	---	---

Notes for Figure 31B-3 and Tables 31B-3a and 31B-3b~~.~~:

1. ~~Maximum r~~Radius at the shallow end shall be ~~1'0"~~ a minimum of 0’6” and a maximum of 1’0”.
2. Springline ~~(D1)~~ shall extend to the break in slope between the shallow area and the ~~diving bowl~~ deep area.
3. ~~See exception to Section 3108B.~~ Maximum radius shall equal D2 minus D1 dimensions.
4. ~~Width of pool at Section D-2 shall be at least 15' 0".~~ Where there is a break in slope, the break in slope shall be located at a water depth equal to 4’6”.
5. The main drain shall be located to provide complete drainage of the pool.

DRAFT

FIGURE 31B-4
PERPENDICULAR FENCING DIMENSIONS ON SLOPING GROUND

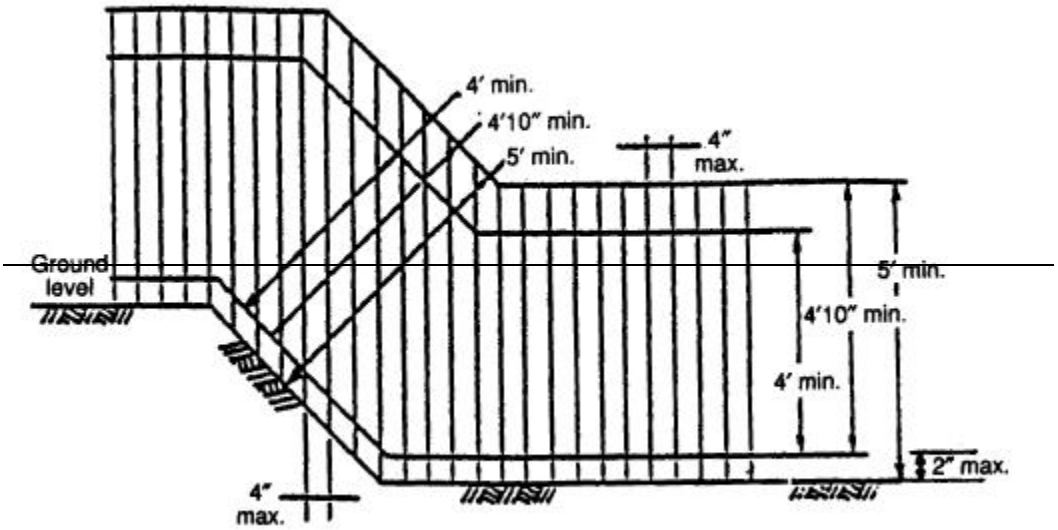

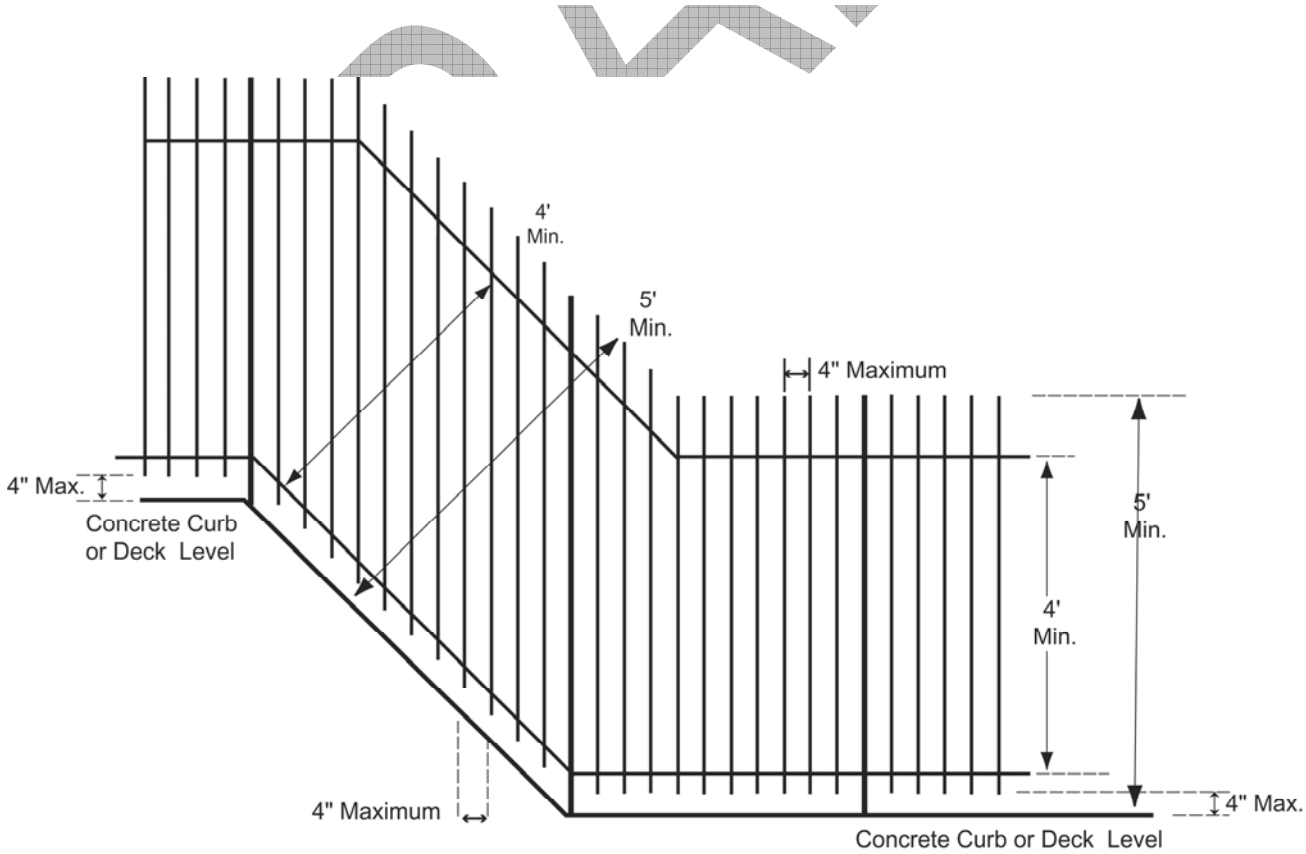

FIGURE 31B-5
EFFECTIVE FENCING HEIGHT

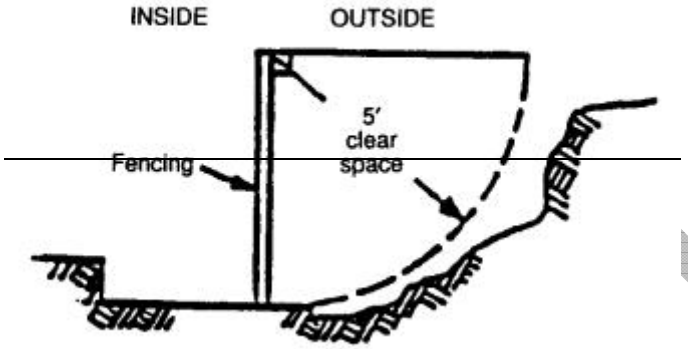

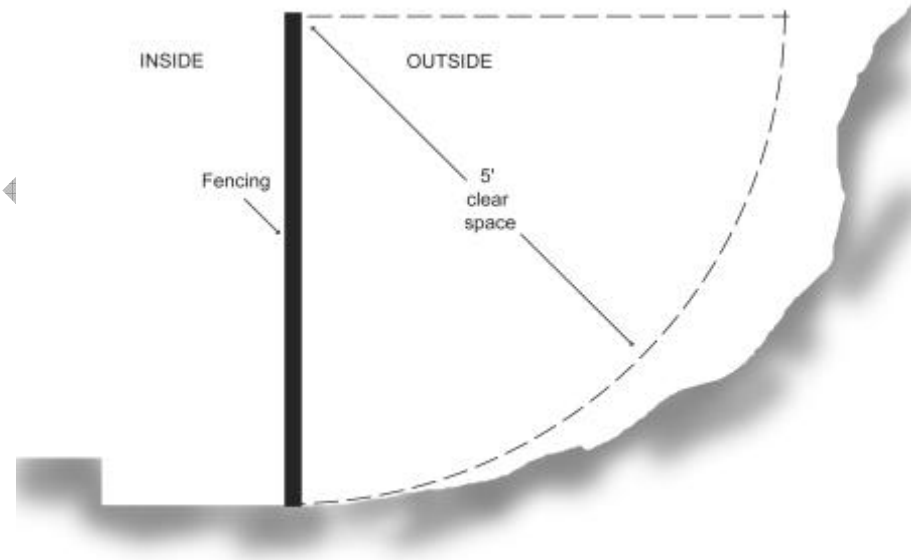

FIGURE 31B-6
DEPTHS AND DIMENSIONS FOR SPA POOLS

Top View

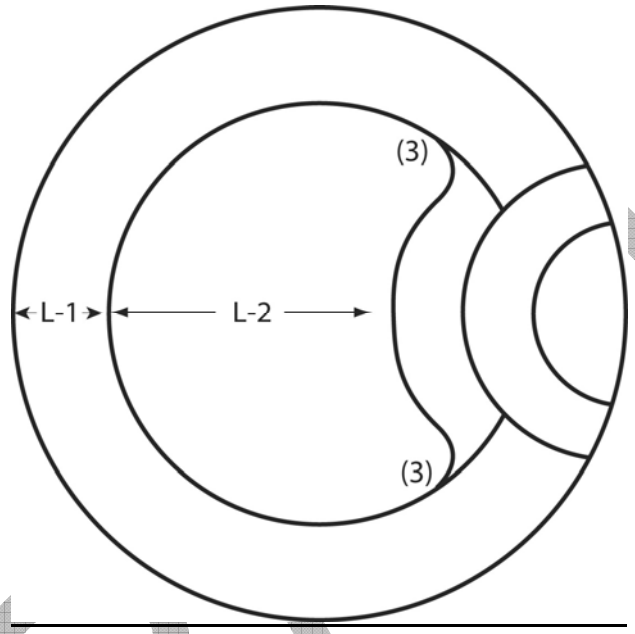

Transverse Section

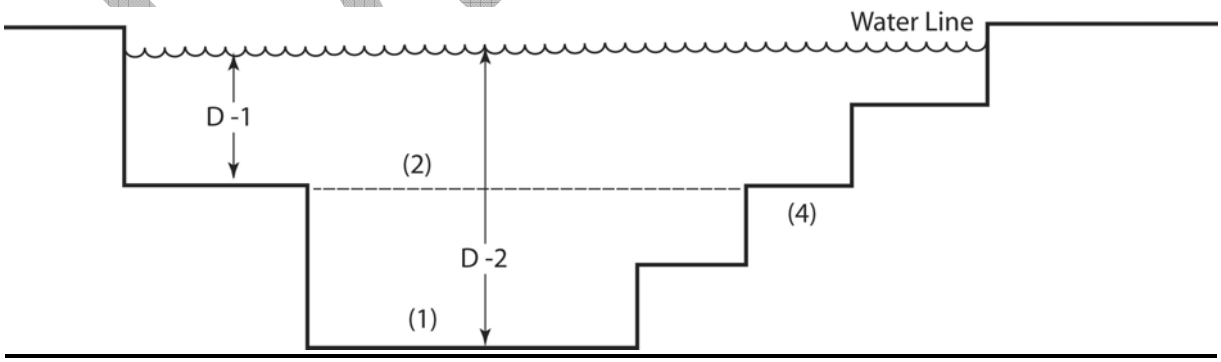

Table 31B-6

	Depth of Water		Length of Sections	
Dimension	**D1**	**D2**	**L1**	**L2**
Minimum	-------	24”	12”	24”
Maximum	24”	42”	24”	-------

Notes for Figure 31B-6 and Table 31B-6:

1. Bottom slope shall not exceed 1:10 and must be uniform.
2. Bench ramping shall not exceed 1:10 uniform slope, measured at the inner circumference of the bench.
3. Six inch minimum radius at "pinch points."
4. See Sections 3111B and 3112B for step and handrail dimensions.

DRAFT

FIGURE 31B-7
STAIR AND HANDRAIL DIMENSIONS

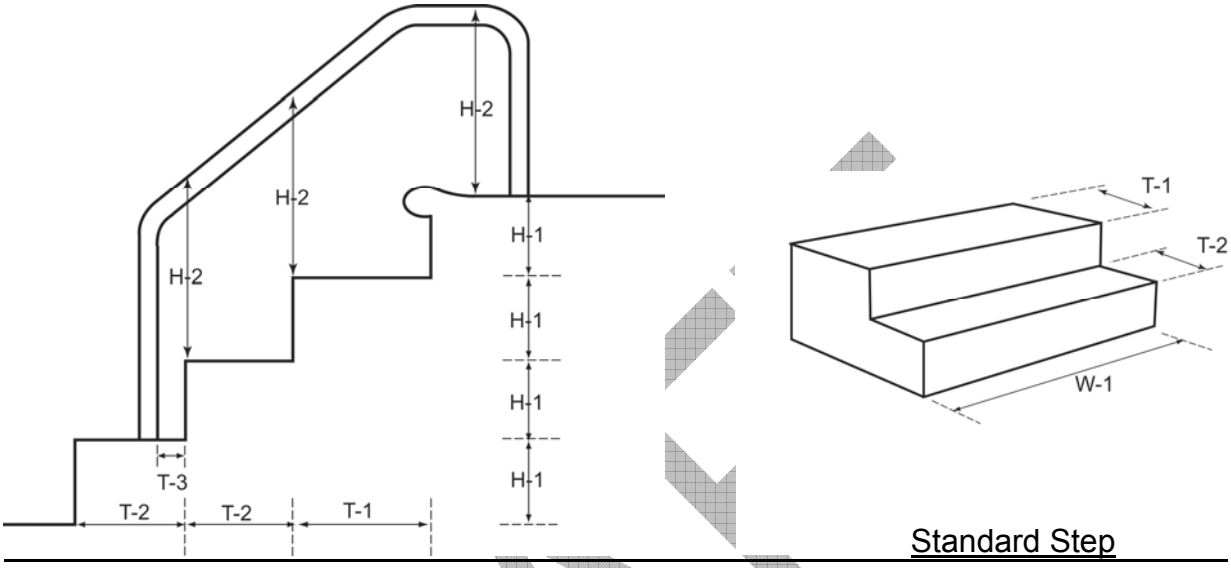

Standard Step

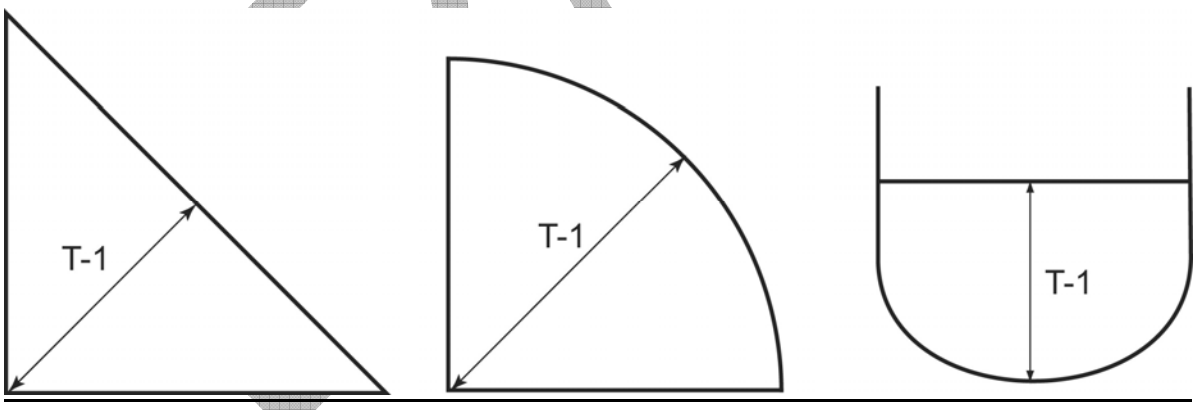

Triangular Step Convex Step Concave Step

Table 31B-7

Dimensions	T-1 Standard	T-1 Triangular, Concave, Convex	T-2	T-3	W-1	H-1	H-2
Minimum	14"	21"	12"	3"	24"	6"	28"
Maximum	18"	24"	16"	---	---	12"	36"

DRAFT